SERVICE PARTS LIST

BULLETIN NO. 54-40-0147

SPECIFY CATALOG NO. AND SERIAL NO. WHEN ORDERING PARTS			REVISED BULLETIN	DATE
8-1/4" D.I. CIRCULAR SAW			54-40-0146	June '93
CATALOG NO. 6407	SERIAL NUMBER	633A	WIRING INSTRUCTION 58-01-1251	

EXAMPLE: 00 | 0
Component Parts (Small #) Are Included When Ordering The Assembly (Large #).

FIG.	PART NO.	DESCRIPTION OF PART	QTY.
1	02-04-0850	Ball Bearing	(1)
2	02-04-2650	Ball Bearing	(2)
3	02-04-2775	Ball Bearing	(1)
4	02-50-2423	Needle Bearing	(1)
5	06-55-0835	8-32 Hex Nut	(4)
6	06-55-1985	5/16-18 Hex Nut	(1)
7	06-65-1535	1/8 x 3/4" Roll Pin	(1)
8	06-75-0477	3/8-24 x 11/16" Blade Screw	(1)
9	06-82-2362	8-32 x 1" Slot. Pan Hd. T-20	(4)
10	06-82-5316	8-32 x 1/2" Slot. Pan Hd. Tapt. T-20	(1)
11	06-82-7252	8-32 x 3/8" Slot. Pan Hd. Tapt. T-20	(2)
12	06-82-7270	8-16 x 5/8" Slot. Pan Hd. Plast. T-20	(4)
13	06-82-7453	8-16 x 2-1/4" Slot. Pan Hd. Plast. T-20	(4)
14	06-83-3620	4-40- x 1/2" Socket Set Screw	(1)
15	06-95-0335	1/4-20 x 1/2" Fil. Hd. Screw	(2)

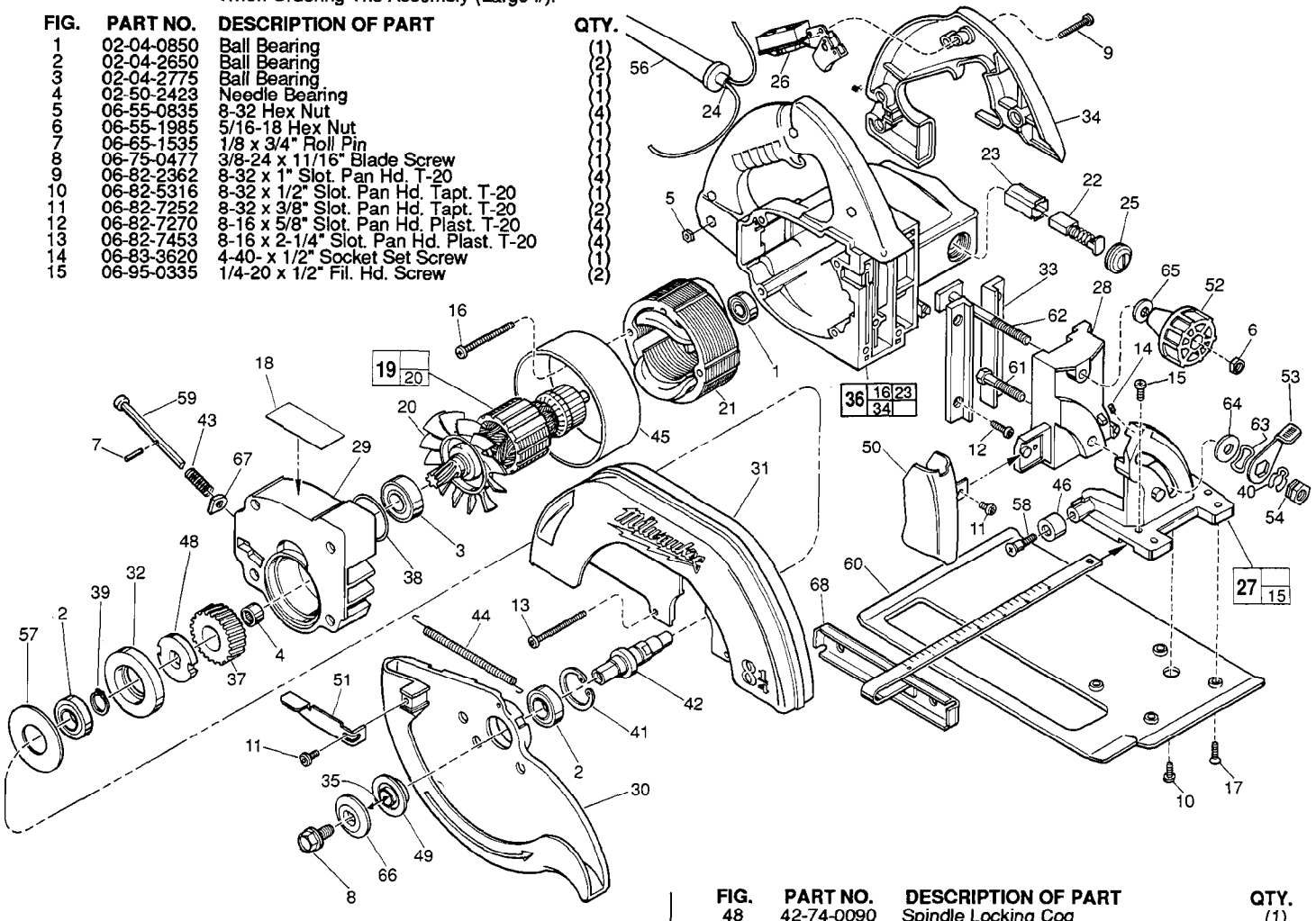

FIG.	PART NO.	DESCRIPTION OF PART	QTY.
16	06-82-7395	8-16 x 1-3/4" Pan Hd. Plastite T-20 Screw	(2)
17	06-95-3250	8-32 x 5/8" Fil Hd. #2 Phil. Tapt. Screw	(4)
★ 18	12-20-0180	Service Nameplate Kit	(1)
19	16-70-0430	120 V Armature	(1)
20	22-84-0655	Fan Assembly	(1)
21	18-70-0032	120 V Field	(1)
22	22-18-0550	Carbon Brush Assembly	(2)
23	22-20-0820	Brush Insert	(2)
24	22-64-0785	Cord Set	(1)
25	23-44-0160	Brush Retaining Screw	(2)
26	23-66-0167	Switch	(1)
27	28-10-0791	Angular Adjusting Bracket	(1)
28	25-10-0810	Vertical Adjusting Bracket	(1)
29	28-14-2170	Gear Case	(1)
30	28-41-0930	Lower Guard	(1)
31	25-41-0939	Upper Guard	(1)
32	28-53-0280	Hub	(1)
33	28-72-0049	Vertical Adjusting Plate	(2)
34	31-44-1421	Left Handle Half	(1)
35	----------	8-1/4" Blade (Select from Catalog)	(1)
★ 36	31-50-1045	Motor Housing Assembly	(1)
37	32-75-3330	Gear	(1)
38	34-40-1375	1-1/4" O-Ring	(1)
39	34-60-1200	Retaining Ring	(1)
40	34-60-2330	Klipring	(1)
41	34-80-2600	Internal Retaining Ring	(1)
42	38-50-5820	Spindle	(1)
43	40-50-8040	Spindle Lock Spring	(1)
44	40-50-8350	Lower Guard Spring	(1)
45	42-14-0310	Baffle	(1)
46	42-38-0223	Bumper	(1)

FIG.	PART NO.	DESCRIPTION OF PART	QTY.
48	42-74-0090	Spindle Locking Cog	(1)
49	43-34-0710	Inner Flange	(1)
★ 50	43-54-0331	Front Blade Guard	(1)
51	43-62-0910	Lower Blade Handle	(1)
52	43-98-0190	Vertical Adjusting Knob	(1)
53	44-10-0200	Lever	(1)
54	44-40-0460	Adjustment Nut	(1)
56	44-76-0050	Cord Protector	(1)
57	44-86-0520	Bearing Retainer Plate	(1)
58	45-04-0505	Bumper Screw	(1)
59	45-08-0200	Spindle Lock Shaft	(1)
60	45-16-0575	Shoe	(1)
61	45-58-0270	Angular Adjusting Stud	(1)
62	45-58-0325	Vertical Adjusting Stud	(1)
63	45-88-0577	Wave Washer	(1)
64	45-88-0650	Angular Adjusting Washer	(1)
65	45-88-0660	Adjusting Washer	(1)
66	45-88-8200	Spindle Washer	(1)
67	45-88-8250	Felt Washer	(1)
	49-96-6200	9/16" Box Wrench	(1)

FIG.	NOTE
10,11,14	Apply Blue Loctite, Type CV-242.
27,28,33	Apply a light coat of dry teflon spray lubricant to all sliding surfaces.
44	Hooks of spring must be completely inserted in slots. Long hook in upper guard.
48	Radius on locking cog must be up against face of gear.
59	Flat of spindle lock shaft must face gear.

FIG.	LUBRICATION
29	1/2 Oz. Type "O" Grease, No. 49-08-4200.

MILWAUKEE ELECTRIC TOOL CORPORATION
13135 W. LISBON RD., BROOKFIELD, WI 53005