# SERVICE PARTS LIST

**BULLETIN NO. 54-40-1125**

| SPECIFY CATALOG NO. AND SERIAL NO. WHEN ORDERING PARTS | | | | REVISED BULLETIN | DATE |
|---|---|---|---|---|---|
| 10-1/4" CIRCULAR SAW | | | | 54-40-1124 | Sept. '94 |
| CATALOG NO. | 6460 | STARTING SERIAL NO. | 607A | WIRING INSTRUCTION 58-01-0750 | |

**EXAMPLE:** 00 0 Component Parts (Small #) Are Included When Ordering The Assembly (Large #).

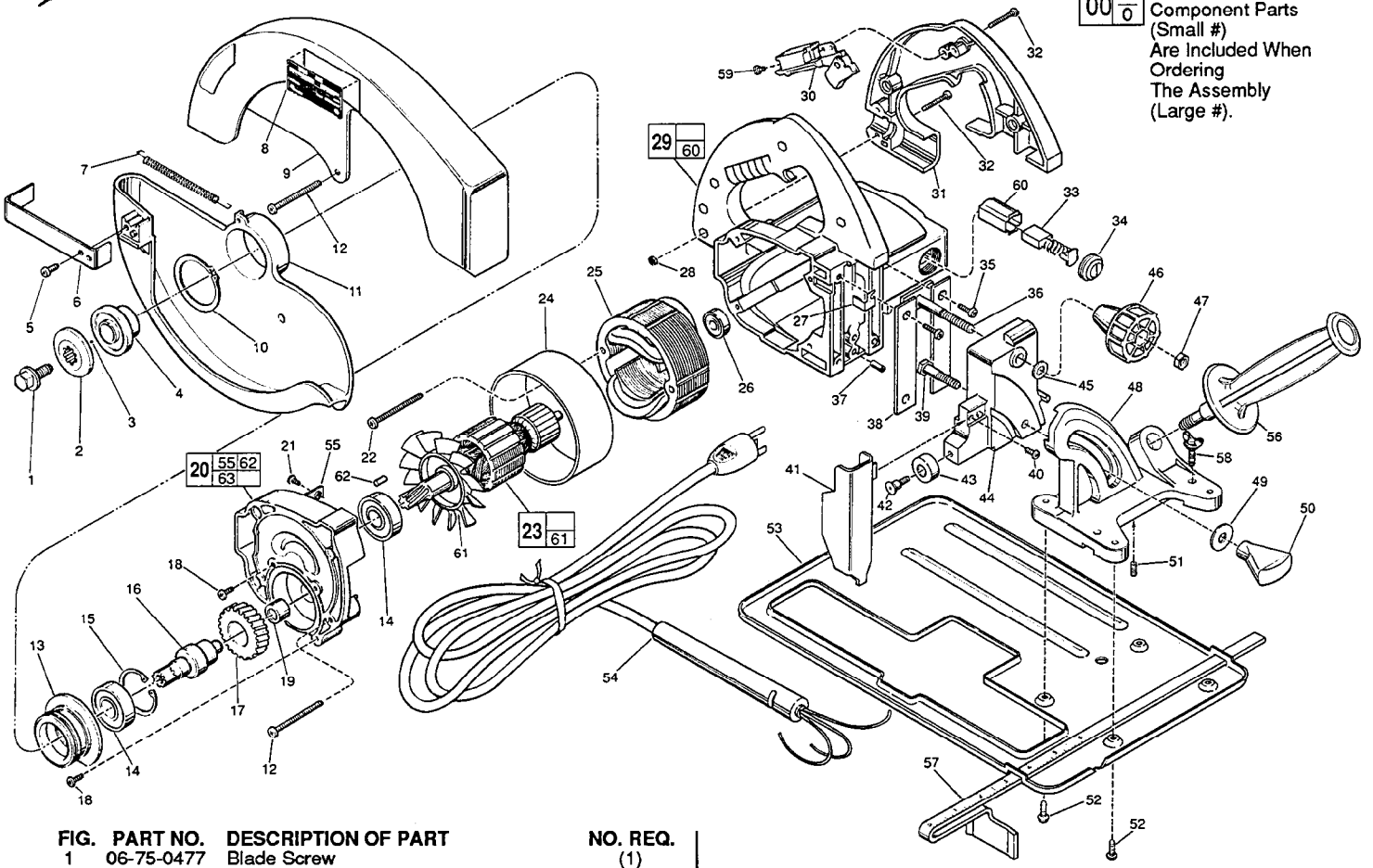


| FIG. | PART NO. | DESCRIPTION OF PART | NO. REQ. |
|---|---|---|---|
| 1 | 06-75-0477 | Blade Screw | (1) |
| 2 | 45-88-7420 | Spindle Blade Retaining Washer | (1) |
| 3 | ———— | 10-1/4" Blade (Select From Catalog) | (1) |
| 4 | 43-34-0260 | Spindle Flange | (1) |
| ★ 5 | 06-82-5316 | 8-32 x 1/2" Pan Hd. Slt. Taptite T-20 | (1) |
| 6 | 43-62-0705 | Lower Guard Handle | (1) |
| 7 | 40-50-7750 | Lower Guard Spring | (1) |
| ★ 8 | 12-20-0620 | Service Nameplate Kit | (1) |
| 9 | 25-41-0670 | Upper Guard | (1) |
| 10 | 34-60-2210 | Retaining Ring - External | (1) |
| 11 | 28-41-0666 | Lower Guard | (1) |
| 12 | 06-82-7382 | 8-16 x 1-5/8" Pan Hd. Plastite T-20 | (4) |
| 13 | 43-78-0280 | Lower Guard Hub | (1) |
| 14 | 02-04-1748 | Ball Bearing | (2) |
| 15 | 34-80-2960 | Retaining Ring - Internal | (1) |
| 16 | 38-50-5175 | Gear Spindle | (1) |
| 17 | 32-75-2790 | Spindle Gear | (1) |
| 18 | 06-82-7252 | 8-32 x 3/8" Pan Hd. Slt.Taptite T-20 | (4) |
| 19 | 02-50-2423 | Needle Bearing | (1) |
| 20 | 14-30-0290 | Gear Case Assembly | (1) |
| 21 | 06-81-8820 | Ground Screw | (1) |
| 22 | 06-82-7453 | 8-16 x 2-1/4" Pan Hd. Plastite T-20 | (2) |
| 23 | 16-70-0131 | 120 V. Armature | (1) |
| 24 | 23-16-0691 | Field Insulating Sleeve | (1) |
| 25 | 18-70-0095 | 120 V. Field | (1) |
| 26 | 02-04-0850 | Ball Bearing | (1) |
| 27 | 42-70-0200 | Ground Clip | (1) |
| 28 | 06-55-0835 | 8-32 Hex Nut | (5) |
| 29 | 31-50-0153 | Motor Housing Assembly | (1) |
| 30 | 23-66-1810 | Switch | (1) |
| 31 | 31-44-0480 | L.H. Handle | (1) |
| 32 | 06-82-2362 | 8-32 x 1" Pan Hd. Slt. T-20 | (5) |
| 33 | 22-18-0147 | Carbon Brush Assembly | (2) |
| 34 | 23-44-0160 | Brush Retaining Screw | (2) |
| 35 | 06-82-7270 | 8-16 x 5/8 Pan Hd Slt. Plastite T-20 | (4) |
| 36 | 45-58-0260 | Vertical Adjusting Stud | (1) |
| 37 | 06-65-1580 | 3/16 x 1/2" Lg. Roll Pin | (1) |
| 38 | 44-66-5321 | Vertical Bracket Plate | (2) |

| FIG. | PART NO. | DESCRIPTION OF PART | NO. REQ. |
|---|---|---|---|
| 39 | 45-58-0270 | Angular Adjusting Stud | (1) |
| 40 | 06-82-7252 | 8-32 x 3/8" Pan Hd. Slt. Taptite T-20 | (1) |
| 41 | 43-54-0360 | Front Blade Guard Assembly | (1) |
| 42 | 45-04-0485 | Guard Bumper Screw | (1) |
| 43 | 42-38-0075 | Rubber Bumper | (1) |
| 44 | 25-10-0644 | Vertical Adjusting Bracket | (1) |
| 45 | 45-88-0660 | Angular Adjusting Washer | (1) |
| 46 | 43-98-0190 | Vertical Adjusting Knob | (1) |
| 47 | 06-55-1985 | 5/16-18 Hex Nut | (1) |
| 48 | 25-10-0640 | Angular Adjusting Bracket | (1) |
| 49 | 45-88-0650 | Angular Adjusting Washer | (1) |
| 50 | 43-98-0240 | Adjusting Knob | (1) |
| 51 | 06-83-0801 | 8-32 x 3/8" Hdls. Set Screw | (1) |
| 52 | 06-95-0212 | 8-32 x 1/2" Pan Hd. Phil. Dr. Screw | (4) |
| 53 | 45-16-0385 | Saw Shoe | (1) |
| 54 | 22-64-0076 | Cord Set | (1) |
| 55 | 42-36-1120 | Ground Screw Bracket | (1) |
| 56 | 43-62-0885 | Side Handle | (1) |
| 57 | 49-02-0080 | Rip Fence | (1) |
| 58 | 06-88-0110 | 1/4-20 x 3/4" Wing Screw | (2) |
| 59 | 05-78-0305 | Switch Screw | (4) |
| 60 | 22-20-0350 | Brush Insert | (2) |
| 61 | 22-84-0655 | Fan Assembly | (1) |
| 62 | 45-30-0110 | Ball Bearing Retaining Slug | (1) |
| ★ 63 | 06-82-7252 | 8-32 x 3/8" Pan Hd. Slt. Tapt. T-20 (Not Shown) | (1) |
| | 49-96-6200 | 9/16" Wrench | (1) |
| | 10-98-6131 | Warning Label | (1) |

| FIG. | LUBRICATION |
|---|---|
| 20 | 1/2 Oz. Type "O" Grease, No. 49-08-4200. |

| FIG. | NOTES |
|---|---|
| 51 | Apply "Blue" Loctite, Type 242. |


**MILWAUKEE ELECTRIC TOOL CORPORATION**
13135 W. LISBON RD., BROOKFIELD, WI 53005