SERVICE PARTS LIST

BULLETIN NO. 54-40-4150

SPECIFY CATALOG NO. AND SERIAL NO. WHEN ORDERING PARTS			REVISED BULLETIN	DATE
TWO SPEED D.I. SAWZALL			54-40-4149	May '93
CATALOG NO. 6512	STARTING SERIAL NO.	483A	WIRING INSTRUCTION 58-01-0262	

EXAMPLE:
00 o Component Parts (Small #) Are Included When Ordering The Assembly (Large #).

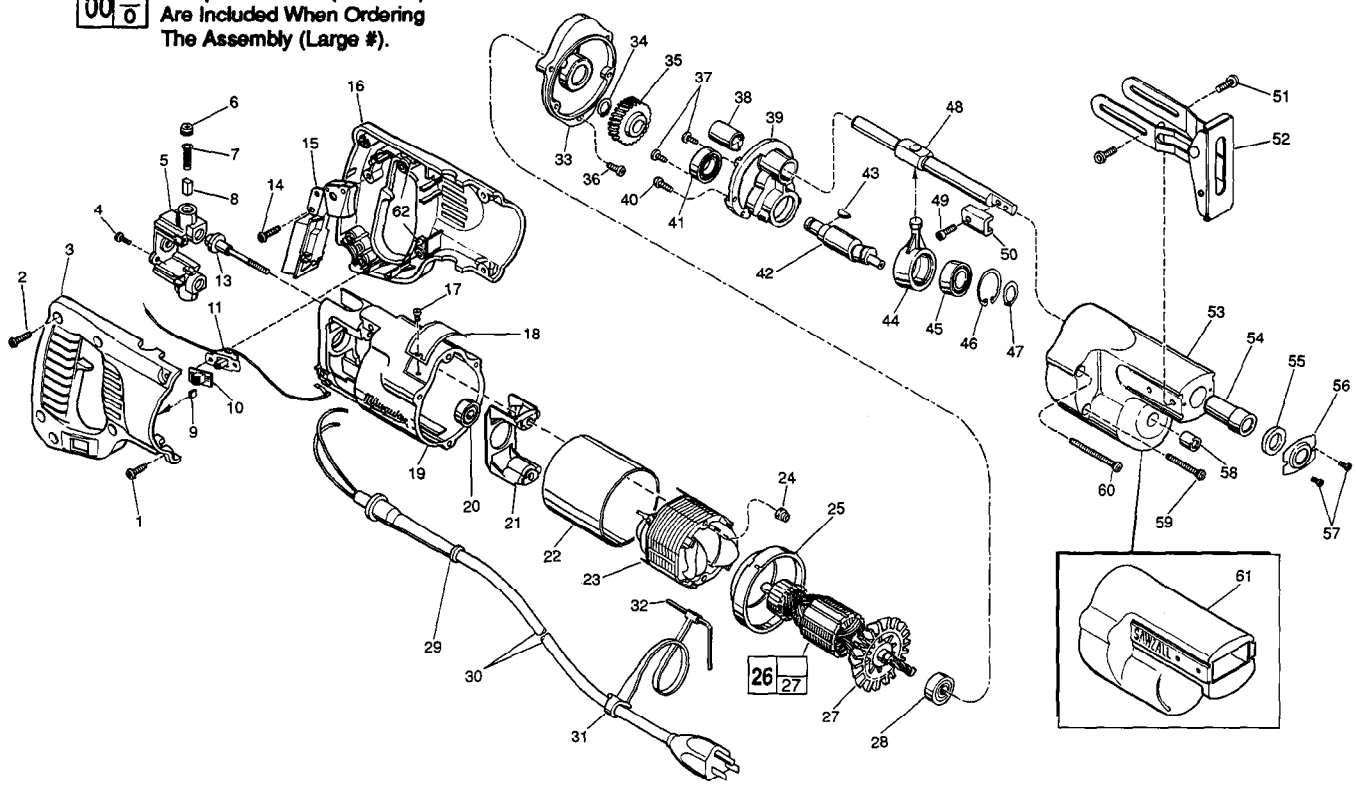

FIG.	PART NO.	DESCRIPTION OF PART	NO. REQ.
1	06-82-5316	8-32 x 1/2" Slot Pan Hd. T-20	(4)
2	06-82-7270	8-16 x 5/8" Pan Hd. Plastite T-20	(5)
3	31-44-1651	Right Handle Half	(1)
4	06-95-0075	6-32 x 3/8" Truss Hd. Taptite Screw	(2)
5	22-22-1380	Brush Holder Assembly	(1)
6	23-44-0190	Brush Retaining Cap	(2)
7	23-52-0160	Brush Spring	(2)
8	22-16-0275	Carbon Brush	(2)
9	42-38-0240	Bumper	(2)
10	31-12-0190	Switch Cap	(1)
11	23-66-2020	Switch Assembly	(1)
13	06-81-1060	8-32 x 2-1/4" Field Bolt	(2)
14	06-82-7270	8-16 x 5/8" Pan Hd. Plastite T-20	(1)
15	23-66-0167	On - Off Switch	(1)
16	31-44-1656	Left Handle Half	(1)
★ 17	06-85-0200	Nameplate Rivet	(2)
★ 18	12-99-1740	Service Nameplate	(1)
★ 19	28-50-6220	Motor Housing	(1)
20	02-04-0845	Ball Bearing	(1)
21	31-55-0190	Coil Shield	(1)
22	23-16-0456	Field Insulator	(1)
23	18-31-0200	120 V. Field	(1)
24	06-57-2975	8-32 Flexlock Hex Nut	(2)
25	31-05-0050	Baffle	(1)
26	16-30-0425	120 V. Armature	(1)
27	22-84-0531	Fan Assembly	(1)
28	02-04-0911	Ball Bearing	(1)
29	44-76-0210	Cord Protector	(1)
30	22-64-0408	Cord Set	(1)
31	48-66-4080	Key Holder	(1)
32	49-96-0070	5/32" Socket Wrench	(1)
33	28-28-0350	Diaphragm	(1)
34	34-60-0920	External Retaining Ring	(1)
35	32-40-1920	Intermediate Gear	(1)
36	06-82-0015	8-32 x 5/8" Fil. Hd. Taptite T-20	(1)
37	06-95-0075	6-32 x 3/8" Truss Hd. Taptite Screw	(2)
38	42-24-0250	Rear Spindle Bearing	(1)
39	28-72-1002	Bearing Plate	(1)
40	06-82-0020	8-32 x 1/2" Fil. Hd. Taptite T-20	(2)
41	02-04-1510	Ball Bearing	(1)
42	36-92-0720	Wobble Shaft	(1)
43	06-42-1200	Woodruff Key	(1)
44	30-72-0060	Wobble Plate	(1)
45	02-04-1510	Ball Bearing	(1)
46	34-80-2355	Internal Retaining Ring	(1)
47	34-60-1200	Retaining Ring	(1)
48	38-50-5410	Reciprocating Spindle	(1)
49	06-75-2400	10-32 x 1/2" Socket Hd. Screw	(1)
50	42-68-0073	Blade Clamp	(1)
51	06-95-6270	10-24 x 1/2" Pan Hd. Taptite Sems	(4)
52	45-16-0495	Pivot Shoe Assembly	(1)
53	28-14-1780	Gear Case	(1)
54	42-24-0320	Spindle Bearing	(1)
55	45-06-0300	Felt Seal	(1)
56	44-86-0370	Seal Retainer	(1)
57	06-95-0050	4-40 x 3/16" Pan Hd. Taptite Screw	(2)
58	02-50-1640	Needle Bearing	(1)
59	06-82-5525	8-32 x 1-3/8" Fil. Hd. Taptite T-20	(2)
60	06-82-5530	8-32 x 1-7/8" Fil. Hd. Taptite T-20	(2)
61	45-12-0305	Gear Case Insulator	(1)
62	14-46-1001	Foam Slug Kit - 10 Slugs	(2)

FIG.	NOTES
34,46, 47	Burr Side Out .
38	V-Notch Press In From Diaphragm Side.
40	Apply Type 242 Blue Loctite.

FIG.	LUBRICATION
35,39	1/2 Oz. Type "A" Grease, No. 49-08-0800.
53	2-1/2 Oz. Type "B" Grease, No. 49-08-0600.

MILWAUKEE ELECTRIC TOOL CORPORATION
13135 W. LISBON RD., BROOKFIELD, WI 53005