Chicago Pneumatic

CP9779

Air Sander

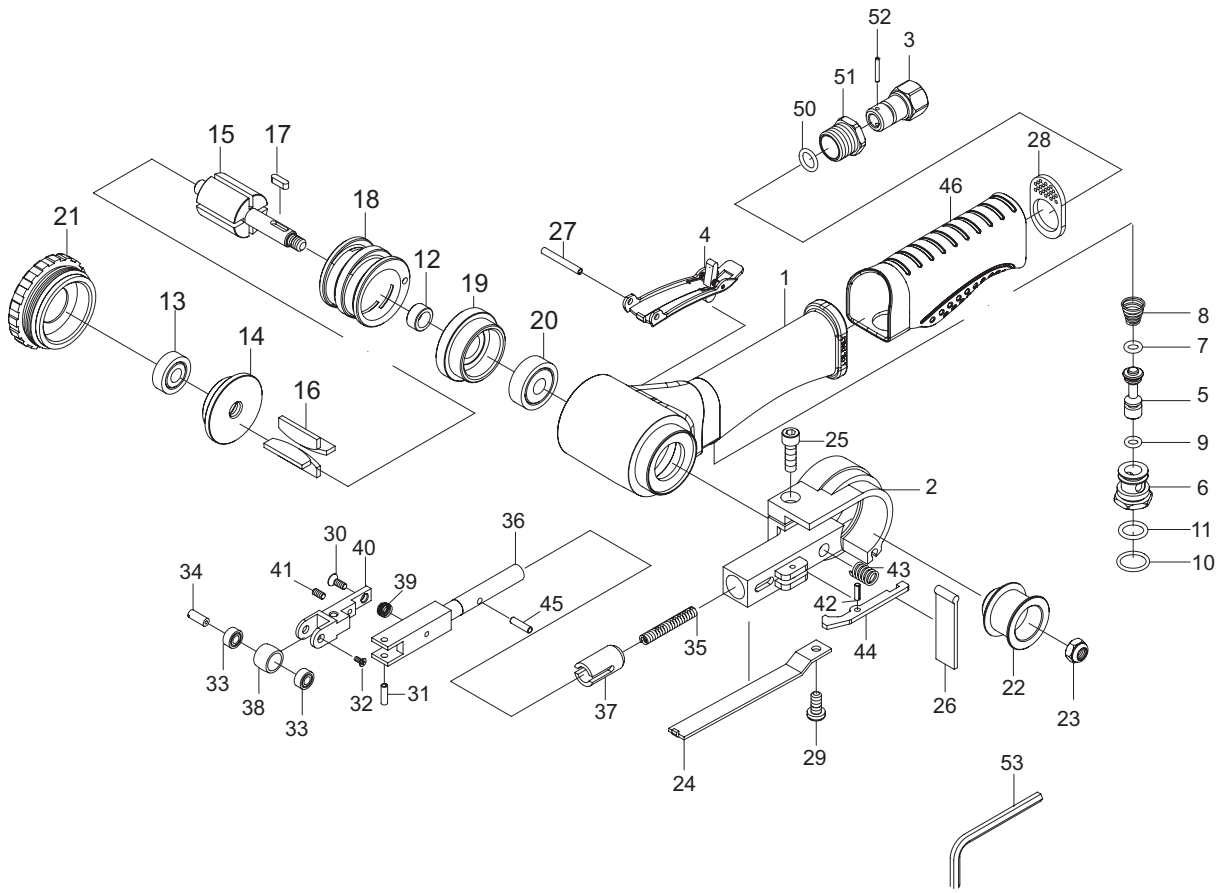

Index No	Part No	Description	Qty
1	2050500283	Housing	1
2	2050500293	Guard	1
3	2050499813	Air Inlet	1
4	2050499823	Throttle Lever assembly	1
5	2050499833	Valve Stem	1
6	2050499843	Valve	1
7	2050485133	O-Ring (4,8*1,9)	1
8	2050499853	Spring	1
9	2050499863	O-Ring (4,47*1,78)	1
10	2050485153	O-Ring (12*1,6)	1
11	2050485863	O-Ring (9,8*1,9)	1
12	2050549103	Space	1
13	2050500303	Ball Bearing (607ZZ)	1
14	2050500313	Rear End Plate	1
15	2050500323	Rotor	1
16	2050524843	Rotor Blade (SET OF 4)	1
17	2050500333	Key (3*3*10)	1
18	2050500343	Cylinder	1
19	2050500353	Front End Plate	1
20	2050500363	Ball Bearing (628ZZ)	1
21	2050499953	Cap	1
22	2050500373	Drive Pulley	1
23	2050500383	Hexagon Nut (M6)	1
24	2050500393	Shoe	1
25	2050500403	Bolt (M5*16)	1
26	2050500413	Dust Cover	1
27	2050496183	Spring Pin (3*24)	1
28	2050500423	Exhaust Deflector	1
29	2050500433	Screw (M4*8)	1

Index No	Part No	Description	Qty
30	2050500443	Screw (M3*8)	1
31	2050500453	Spring Pin (3*10)	1
32	2050500463	Screw M2*5)	1
33	8940166810	Ball Bearing (684ZZ)	2
34	2050500483	Idle Pulley Shaft	1
36	2050500503	Tension Bar	1
38	2050500523	Pulley assembly	1
39	2050500533	Spring	1
40	2050500543	Bracket	1
41	2050500553	Screw (M3*6)	1
35	2050500493	Spring	1
37	2050500513	Bushing	1
42	2050500563	Spring Pin (2,5*8)	1
43	2050500573	Spring	1
44	2050500583	Safety Lever	1
45	2050500593	Lock Pin (3*11,8)	1
46	2050500223	Grip	1
50	2050485623	O-Ring (9*2)	1
51	2050500243	Screw	1
52	2050500253	Pin (2*14,8)	1
53	2050500263	Hex. Key Wrench (4mm)	1

Tune up kit

2050503853 (Incl. Part #: 7, 8, 9, 10 , 11, 12, 13, 16, 17, 20, 50)

	8940168906	OPERATOR'S MANUAL
	8940168305	EC DECLARATION
	6159948770	SAFETY INSTRUCTIONS