Hitachi Power Tools

LIST NO. G899

ELECTRIC TOOL PARTS LIST

■ CORDLESS DRIVER DRILL

2008･2･14

Model DB 10DL

(E1)

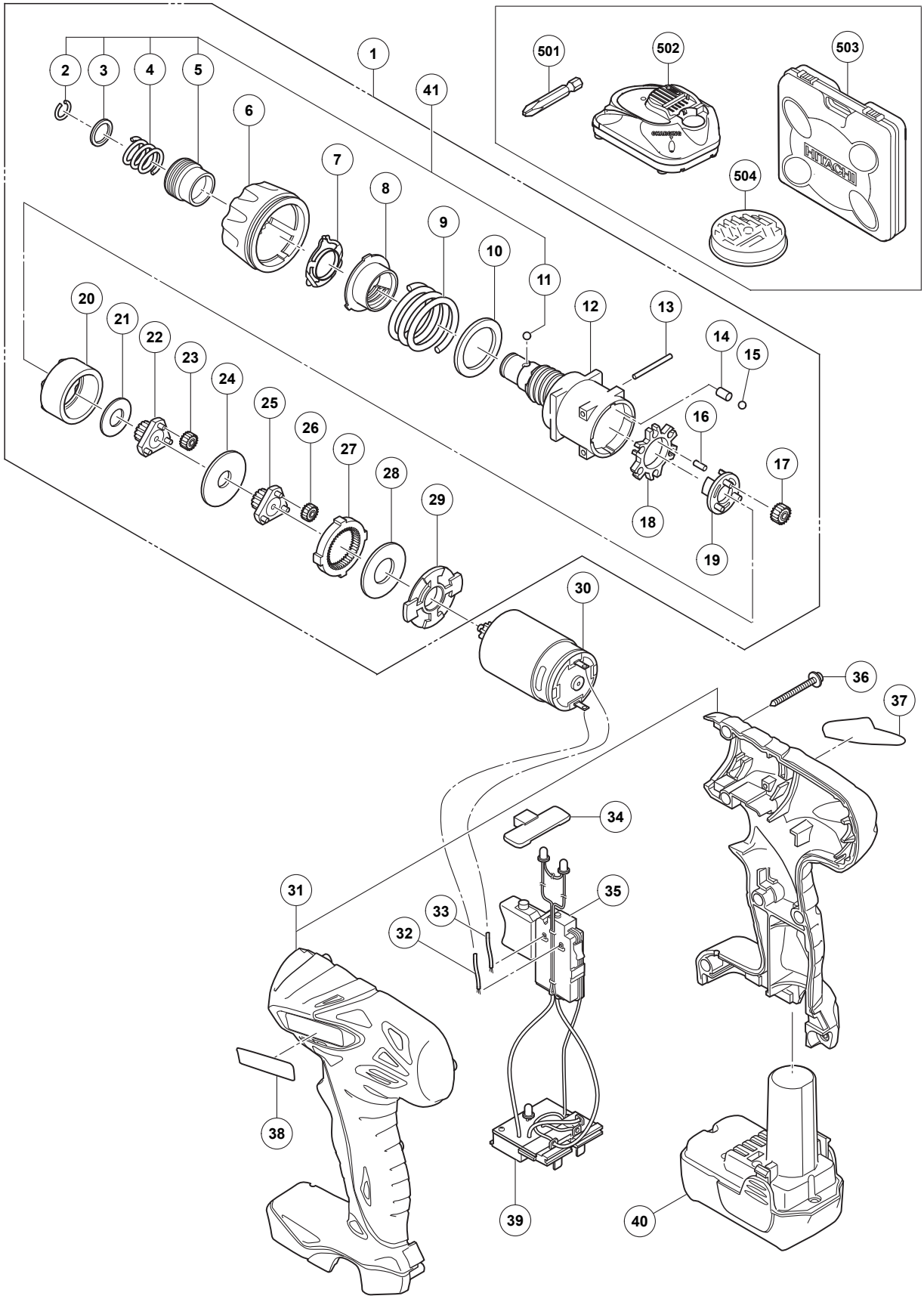

	ITEM NO.	CODE NO.	DESCRIPTION	NO. USED	REMARKS	
	1	329-557	GEAR BOX ASS'Y	1	INCLUD. 2-29	
	2	315-984	RETAINING RING	1		
	3	315-983	WASHER (D)	1		
	4	320-409	GUIDE SPRING	1		
	5	319-921	GUIDE SLEEVE (A)	1		
	6	329-578	CLUTCH DIAL	1		
	7	329-579	CLICK SPRING	1		
	8	329-577	NUT	1		
	9	329-576	SPRING	1		
	10	329-575	WASHER (D)	1		
	11	319-535	STEEL BALL D3.5 (10 PCS.)	1		
	12	329-558	GEAR CASE	1		
	13	329-565	NEEDLE	2		
	14	329-574	PIN SET (6 PCS.)	6		
	15	321-905	STEEL BALL D4 (10 PCS.)	6		
	16	329-560	NEEDLE ROLLER SET (6 PCS.)	6		
	17	329-563	PLANET GEAR (C) SET (3 PCS.)	3		
	18	329-559	LOCK RING	1		
	19	329-561	CARRIER	1		
	20	329-562	RING GEAR	1		
	21	329-564	WASHER (C)	1		
	22	329-566	PINION (C)	1		
	23	329-568	PLANET GEAR (B) SET (3 PCS.)	3		
	24	329-567	WASHER (B)	1		
	25	329-569	PINION (B)	1		
	26	329-571	PLANET GEAR (A) SET (3 PCS.)	3		
	27	329-570	FIRST RING GEAR	1		
	28	329-572	WASHER (A)	1		
	29	329-573	MOTOR SPACER	1		
	30	329-582	MOTOR	1		
	31	329-556	HOUSING (A). (B) SET	1		
	32	329-584	INTERNAL WIRE (BLACK)	1		
	33	329-583	INTERNAL WIRE (RED)	1		
	34	329-548	PUSHING BUTTON (A)	1		
	35	329-581	DC-SPEED CONTROL SWITCH	1		
	36	313-687	TAPPING SCREW (W/FLANGE) D3X16 (BLACK)	7		
	37		NAME PLATE	1		
	38		HITACHI LABEL	1		
	39	329-580	CONTROLLER (B)	1		
*	40	329-371	BATTERY BCL 1015 (EUROPE, AUS, NZL)	2		
*	40	329-370	BATTERY BCL 1015 (USA, CAN)	2		
*	40	329-369	BATTERY BCL 1015 (CHN)	2		
*	40	329-389	BATTERY BCL 1015 (TPE)	2		
	41	320-085	GUIDE SLEEVE SET	1	INCLUD. 2-5, 11	

STANDARD ACCESSORIES

DB 10DL

ITEM NO.	CODE NO.	DESCRIPTION	NO. USED	REMARKS	
501	992-671	+ DRIVER BIT (B) NO.2 50L	1		
502		CHARGER (MODEL UC 10SFL)	1		
503	329-585	CASE	1		
504		BIT SET	1	FOR USA, CAN	

OPTIONAL ACCESSORIES

ITEM NO.	CODE NO.	DESCRIPTION	NO. USED	REMARKS	
601	992-670	+ DRIVER BIT (B) NO.1 50L	1		
602	992-672	+ DRIVER BIT (B) NO.3 50L	1		
603	321-823	DRILL CHUCK AND ADAPTER SET	1	INCLUD. 604, 605	
604	307-543	CHUCK ADAPTER	1		
605	987-575	CHUCK WRENCH FOR 10VLB-D, 10VLR-D	1		

ITEM NO.	CODE NO.	DESCRIPTION	NO. USED	REMARKS	