SBZ 14.4 No. : 601444420

CD identifier: MetaboSD2_0801i

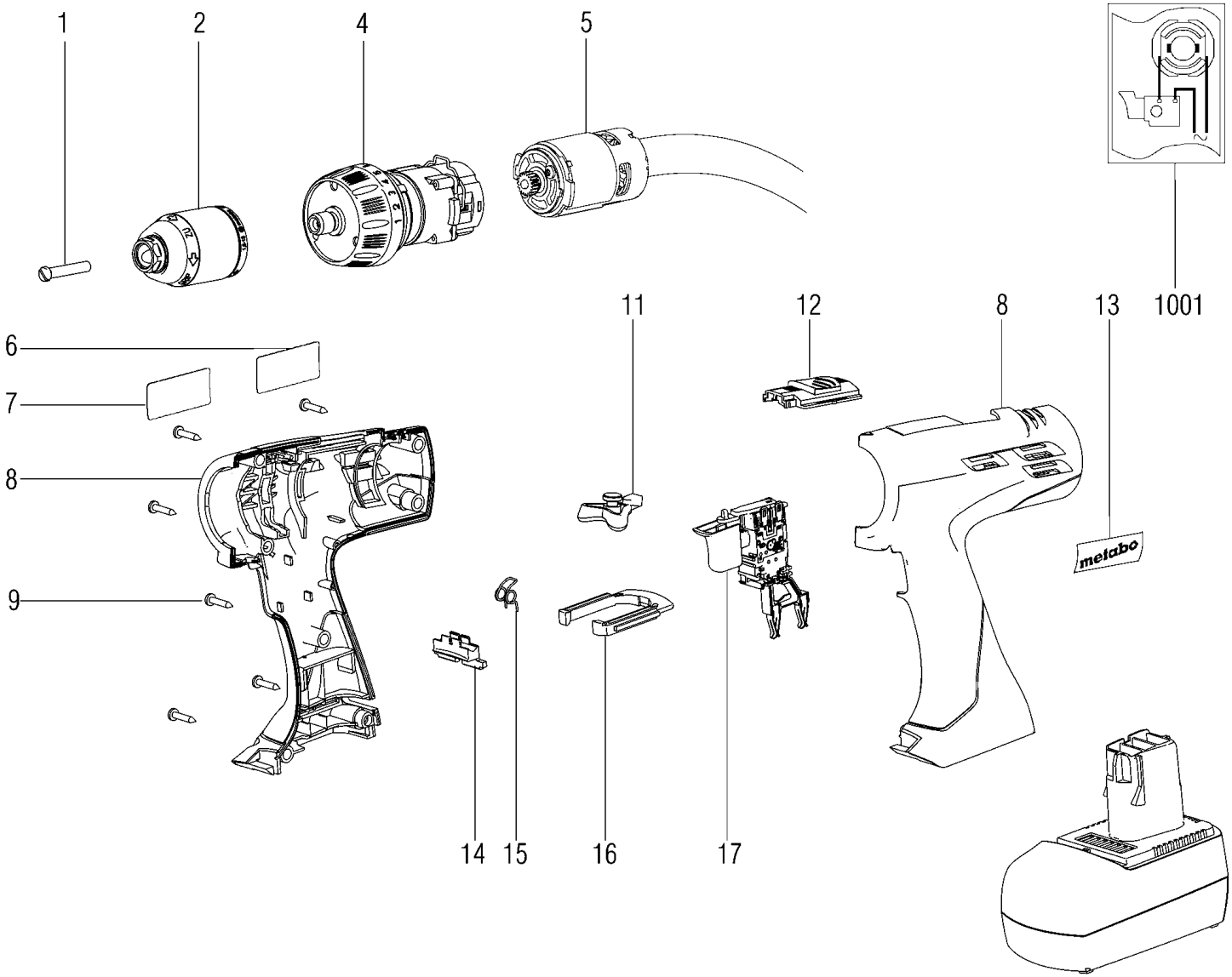

SBZ 14.4 No. : 601444420

CD identifier: MetaboSD2_0801i

Item no.	Part No.	Part designation	pc	Price/pc.	
1	341701940	Cheese-head screw	1		
2	301003110	Keyless chuck,1/2 X20 R+L	1		
4	316040570	Gear-box compl.	1		
5	316041970	Motor cpl.	1		
6	338117400	Warning label	1		
7	338048760	Rating plate	1		
8	343391640	Housing 2 part	1		
9	141113180	Self-tap. fill. h. screw	7		
11	316038190	Handle (upper+under part)	1		
12	343390950	H/L switch	1		
13	338114650	Metabo label	1		
14	343390480	Bit Holder 18 V	1		
15	342021670	Spring clip	1		
16	343390440	Locking slide	1		
17	343407600	Electronic switch	1		
1001	338504070	Diagram	1		