Hitachi Power Tools

LIST NO. F885

ELECTRIC TOOL PARTS LIST

■ CHARGER

2003・7・10

Model UC 18SD

(E1)

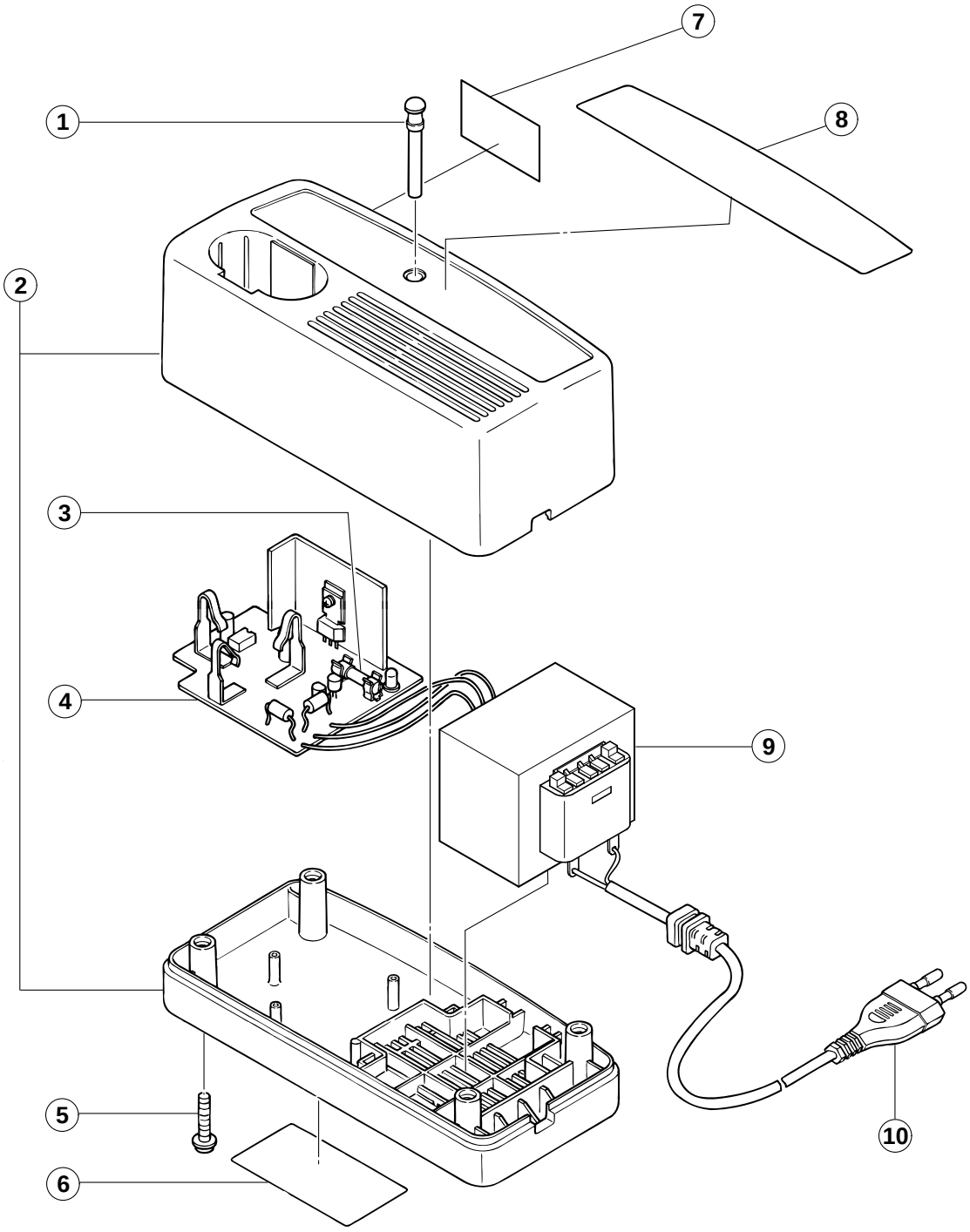

PARTS

UC 18SD

ITEM NO.	CODE NO.	DESCRIPTION	NO. USED	REMARKS	
1	318-258	LIGHT BAR	1		
2	322-187	CASE (A).(B) SET	1		
3	320-682	FUSE (6.3A/250V)	1		
4	322-189	PRINTED CIRCUIT BOARD ASS'Y	1	INCLUD. 3	
5	994-806	SCREW (PLASTIC TIE) D4X20	4		
6		NAME PLATE	1		
7		CAUTION LABEL	1		
8		HITACHI LABEL	1		
9	322-188	TRANSFORMER 120V	1		
10	318-259	CORD	1		

* ALTERNATIVE PARTS

Printed in Japan 7 -- 03
(030710N)