Hitachi Power Tools

LIST NO. G848

ELECTRIC TOOL PARTS LIST

■ CHARGER

2006 · 6 · 30

Model UC 3SFL

(E1)

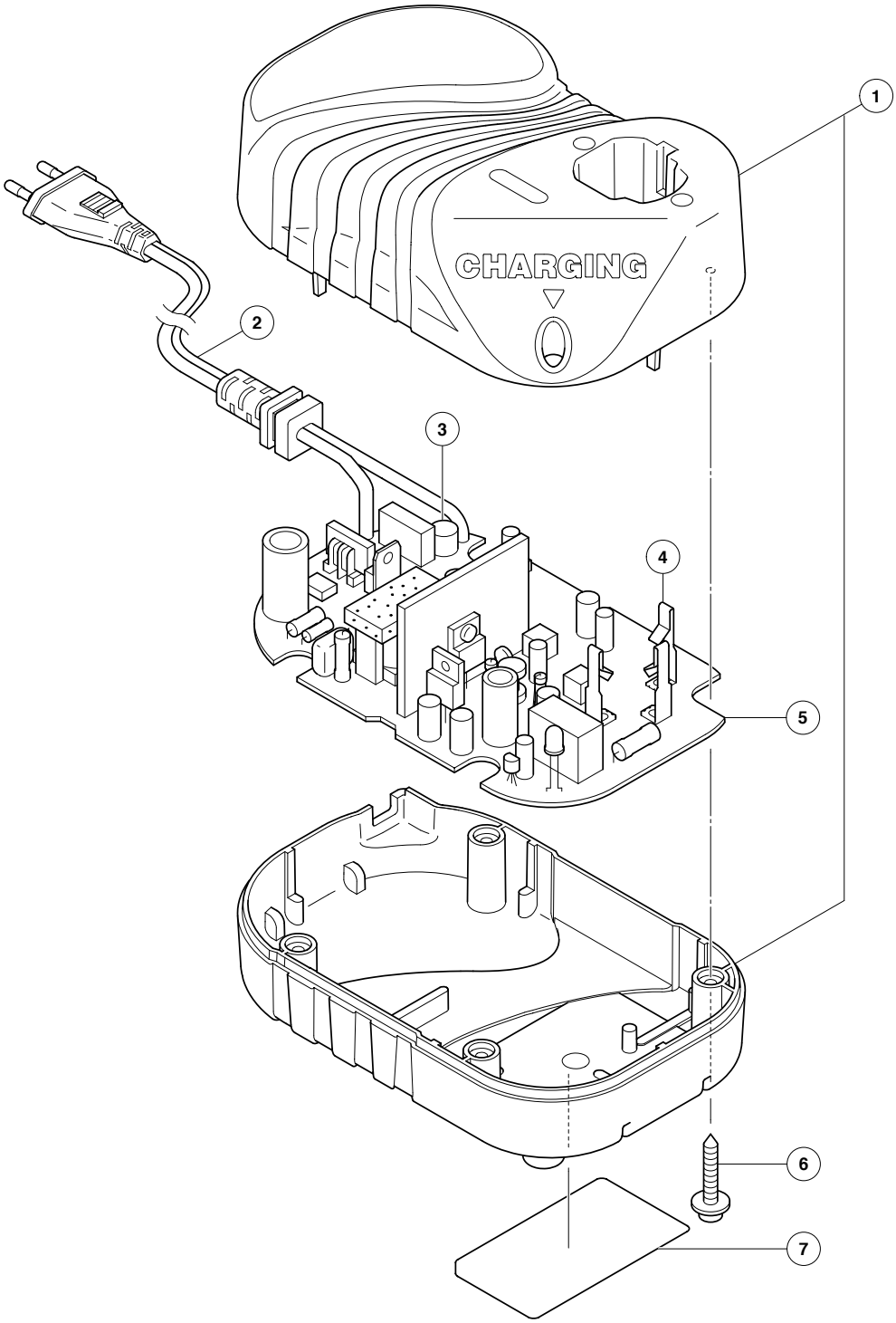

PARTS

	ITEM NO.	CODE NO.	DESCRIPTION	NO. USED	REMARKS	
	1	326-355	CASE (A).(B) SET	1		
*	2	326-213	CORD (EUROPE)	1		
*	2	326-211	CORD (USA)	1	FOR USA, CAN	
*	2	324-742	CORD	1	FOR AUS, NZL	
	3	326-361	FUSE (250V-2A)	1		
	4	324-900	TERMINAL (A)	3		
*	5	326-360	PRINTED CIRCUIT BOARD ASS'Y 120V	1	INCLUD. 3, 4	
*	5	326-359	PRINTED CIRCUIT BOARD ASS'Y 230V	1	INCLUD. 3, 4	
	6	326-358	TAPPING SCREW (W/FLANGE) D3X18	4		
	7		NAME PLATE	1		

* ALTERNATIVE PARTS

Printed in Japan 6 – 06
(060630N)