HITACHI

SUPERDRIVE SCREWDRIVER

■ SCREWDRIVER 2003-11-11

MODEL W6V3SD / W6VB2SD **(E1)**

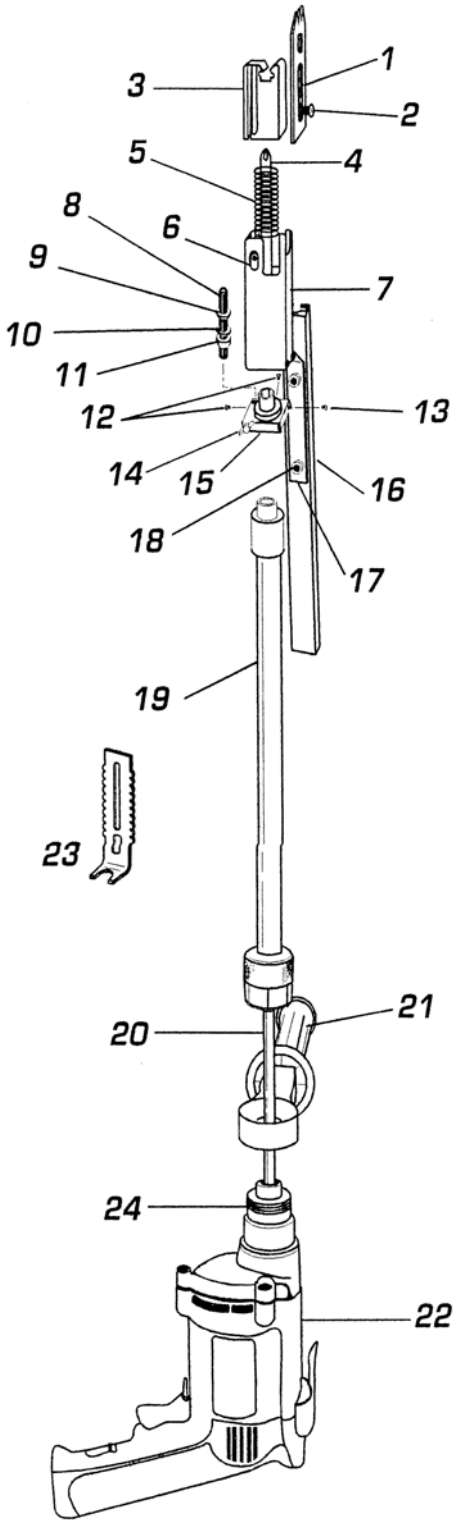

PARTS **W6V3SD / W6VB2SD**

ITEM #	CODE #	DESCRIPTION	OTY	Remarks Vendor Parts #'s
01	725411	Nose Piece, Sub floor / Metal to Metal	1	
02	725413	Nosepiece Screw M4x10mm (FIat Head)	1	
03	725414	Indexing Module	1	
04	725438	Bit 178mm (7") Long (Phillips Head)	1	
04	725439	Bit 178mm (7") Long LOX	1	
05	725415	Main Spring 165mm x 1.7mm (Green)	1	
06	725416	Retaining Clips (2pcs) w/2 Screws (3mm) for Module	2	
07	725417	Indexing Body	1	
08	725418	Depth Control Bar	1	
09	725419	Spring Washer for Depth Control	1	
10	725420	Steel Locknut for Depth Control	1	
11	725421	Depth Control Adjusting Ring	1	
12	725422	Hex Socket Cap Screws M4x10 (2pcs)	2	
13	725423	Hex Socket Cap Screw M4x8 (1pc)	1	
14	725424	Body Wing Screw, Alloy M4x22 (1pc) for End Plate	1	
15	725425	End Plate	1	
16	725426	Feed Track for SuperDrive	1	
17	725427	Bracket (Z-Clip Bar) for Feed Track	1	
18	725428	F-Track Screws 1/4-20 x 5/16" (5pcs)	5	
19	725429	Extension 19"	1	
20	725430	Bit Extension	1	
21	725431	Handle Assembly	1	
22		Refer to Specific Screwdriver that is attached to Drive System	1	
23	725412	Nose Piece, Drywall / Deck	1	
24	725433	Coupler, SuperDrive to W6V3 Drill	1	
25	725432	Stainless Steel Tube for End Plate	1	
26	725436	SuperDrive Tool bag	1	
27	725434	Tri-Flow Oil	1	
		********** More Optional Accessories **********		
	725461	Head with Feeder Arm (Items 1-17)		
	725443	LOX Bit, Blue #3 (7")		
	725442	LOX Bit, Blue #2 (5 1/2")		
	725441	LOX Bit, Blue #2 (5")		
	725440	LOX Bit, Blue #2 (9")		

Standard Accessories

ITEM #	CODE #	DESCRIPTION	Remarks

Optional Accessories

ITEM #	CODE #	DESCRIPTION	Remarks
	725410	SuperDrive Power Unit, Assy.	Includes Items 01-21 & 23-26

2003-11-11

Created By Allen R.