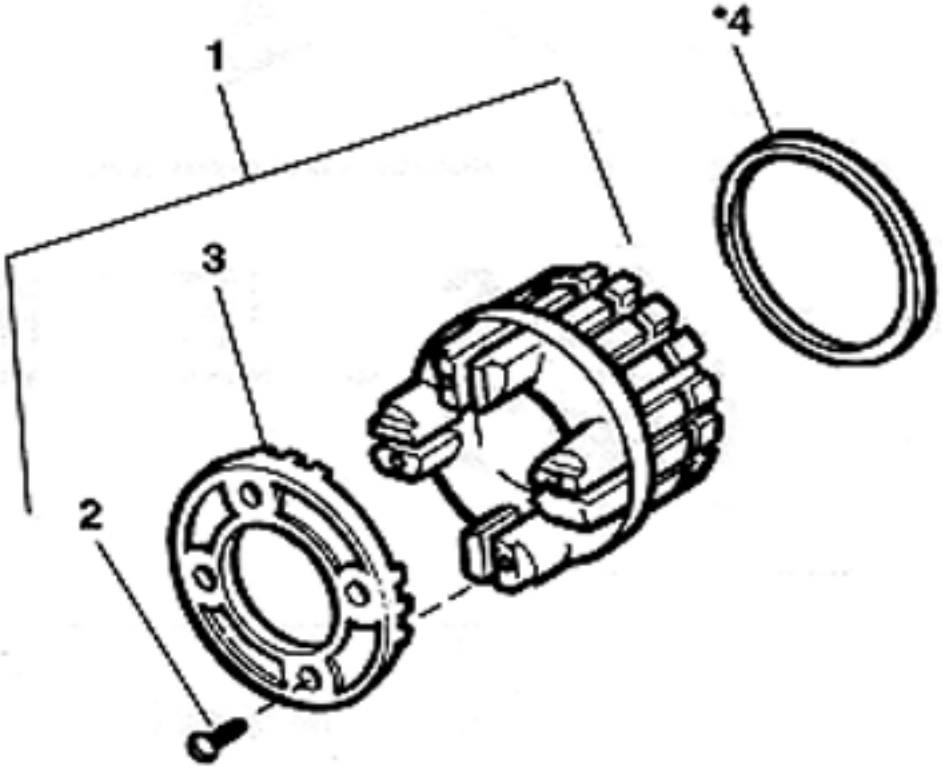
1
•4
3
2