0 601 521 039
Stand / Issue ~~D2-65~~ 08-01-16

Fig./Abb. 1

● Vor Demontage des Ankers Kohlebürsten 5mm zurückziehen !

Before the armature is removed the carbon brushes must be withdrawn by at least 5mm !

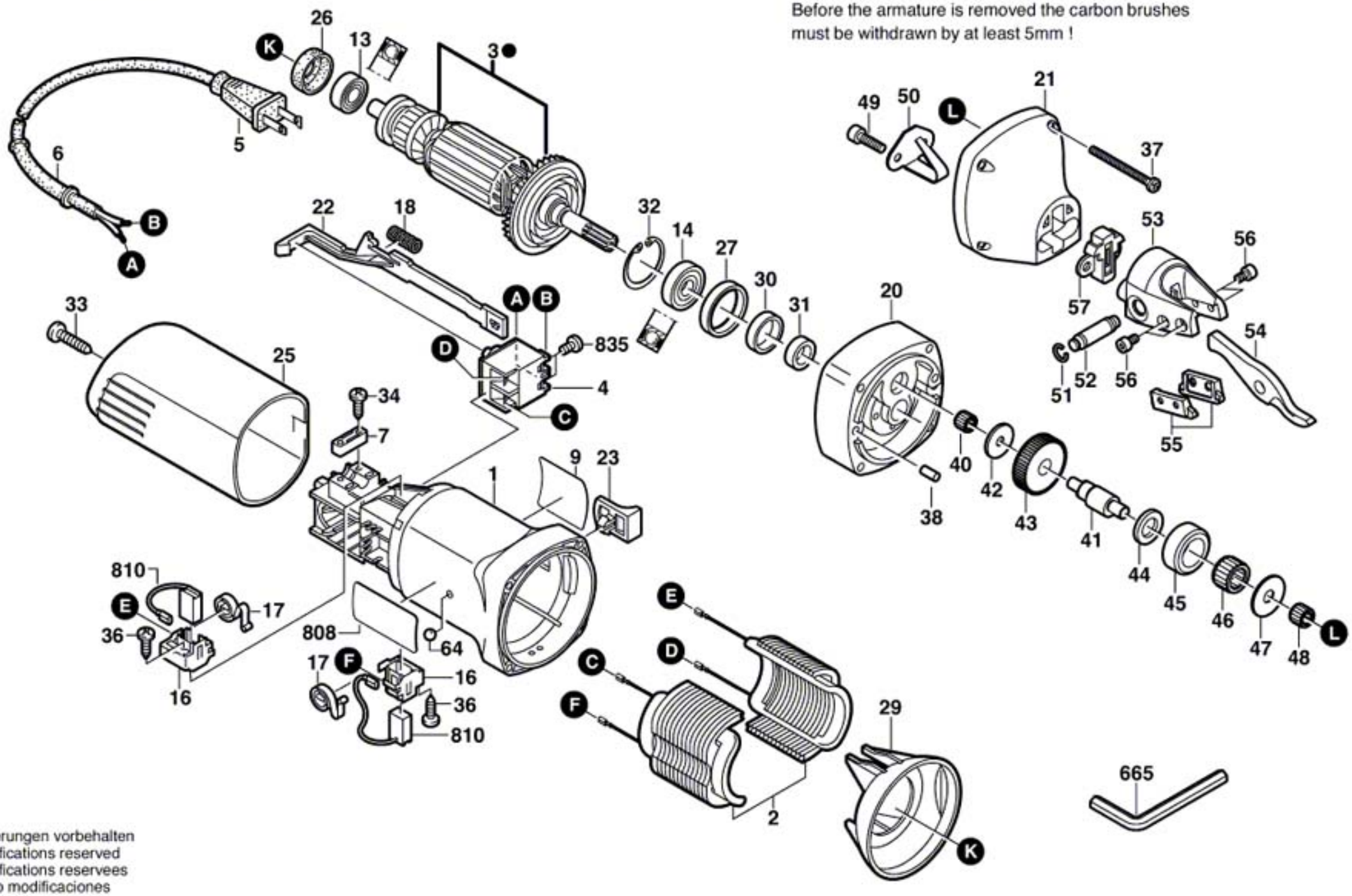

Änderungen vorbehalten
Modifications reserved
Modifications reservees
Salvo modificaciones