0 603 272 139
Stand } ~~99-04~~
Issue } 99-07-19

Fig./Abb. 1

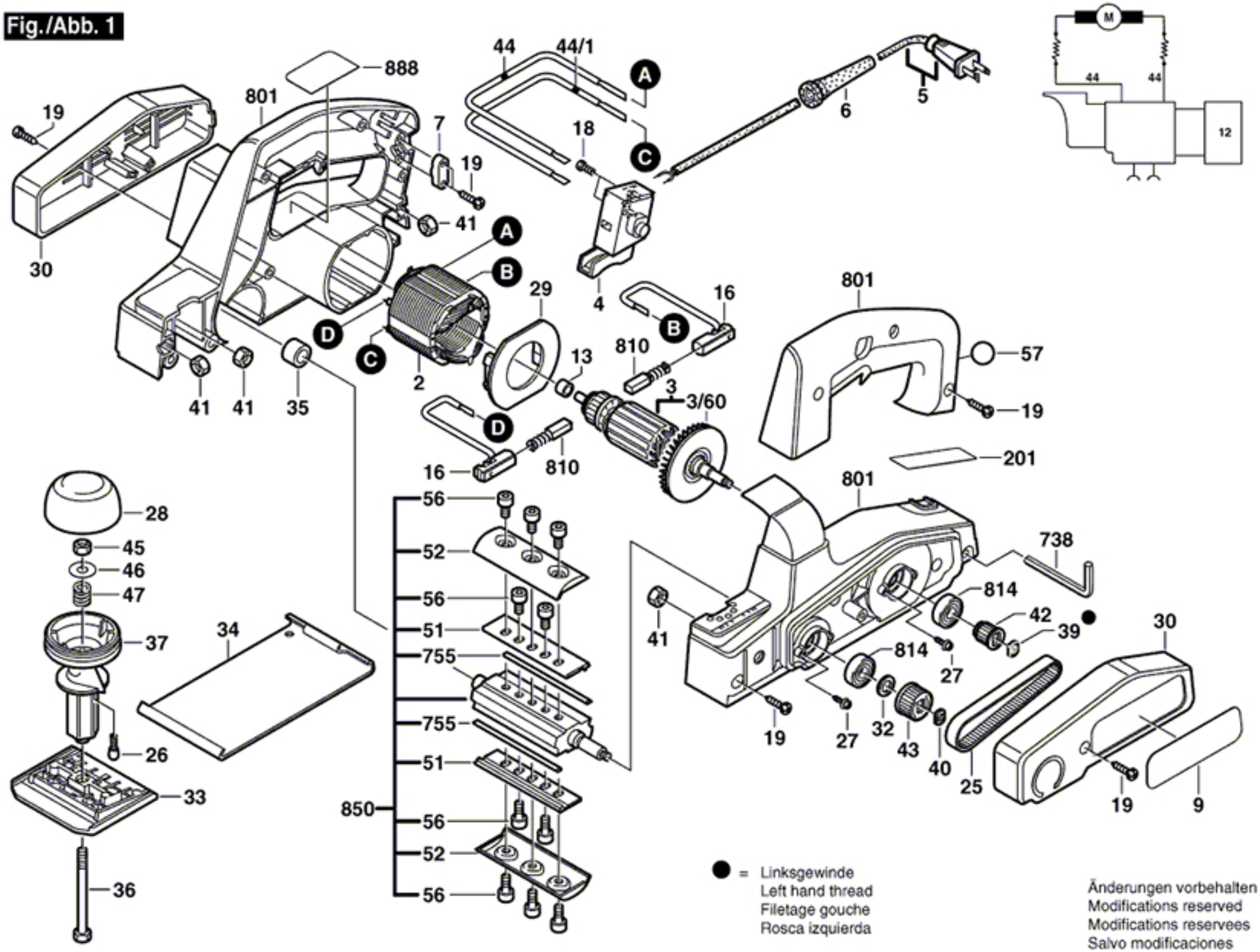

● = Linksgewinde
Left hand thread
Filetage gouche
Rosca izquierda

Änderungen vorbehalten
Modifications reserved
Modifications reservees
Salvo modificaciones