DELTA

36-447 & 36-448
30" UNIRIP™
T-SQUARE®

CS-20
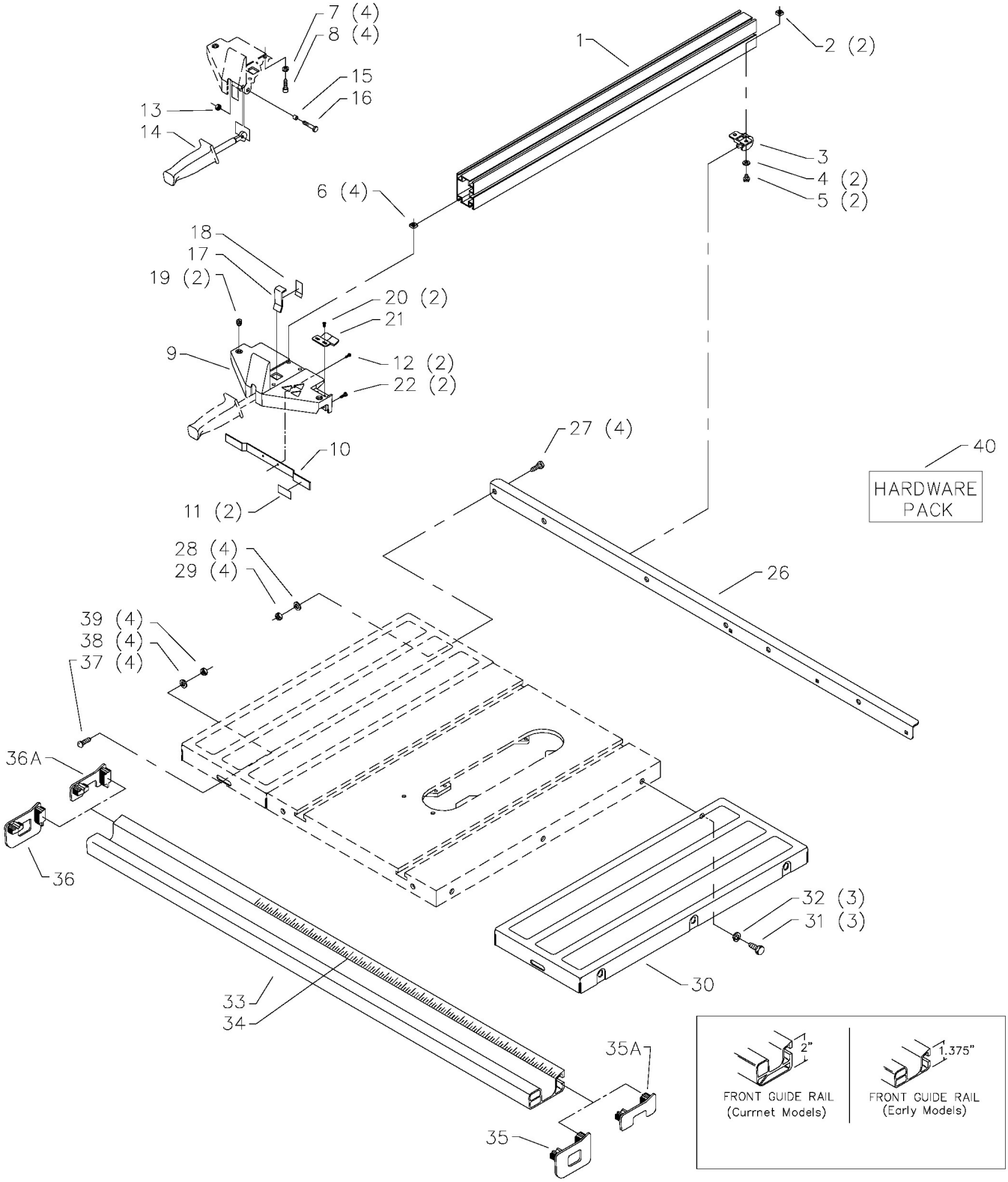
PART NO. 422-19-651-0052
Revised: 09-03-02