Hitachi Power Tools

ACCESSORY PARTS LIST

■ DUST EXTRACTOR 2017 • 02 • 08
Model 402976 (E1)

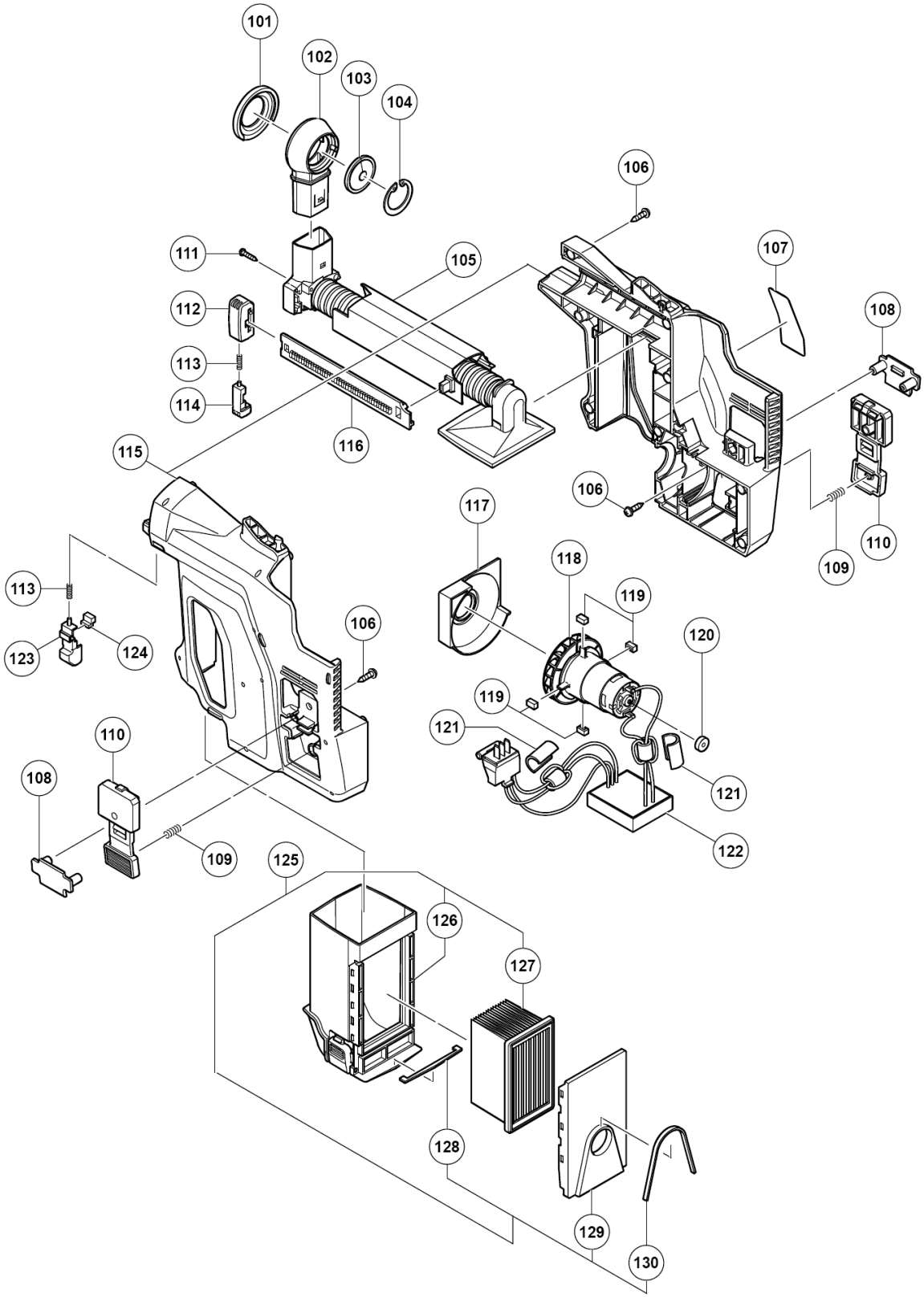

PARTS

402976

ITEM NO.	CODE NO.	DESCRIPTION	NO. USED	REMARKS
101	370494	NOZZLE SEAL	1	
102	370495	NOZZLE	1	
103	370496	BRUSH CAP	1	
104	370497	RETAINING RING D35	1	
105	370823	SLIDE PIPE	1	
106	307811	TAPPING SCREW (W/FLANGE) D4X16 (BLACK)	13	
107		NAME PLATE	1	
108	370511	LATCH HOLDER	2	
109	370821	SPRING (E)	2	
110	370512	LATCH (A)	2	
111	370500	TAPPING SCREW D2.6	4	
112	370501	ADJUSTER	1	
113	370502	SPRING (A)	2	
114	370838	BUTTON (A)	1	
115	370508	HOUSING SET	1	
116	370504	ADJUSTMENT RAIL	1	
117	370514	FAN COVER	1	
118	370515	MOTOR FAN SET	1	
119	337801	RUBBER BUSHING (A)	4	
120	337802	RUBBER BUSHING (B)	1	
121	339343	SUPPORT (D)	2	
122	370517	CONTROLLER	1	
123	370509	BUTTON (B)	1	
124	370510	STOPPER	1	
125	370518	DUST BOX ASS'Y	1	INCLUD.126-130
126	370822	DUST BOX	1	
127	370520	FILTER	1	
128	370519	PACKING (C)	1	
129	370521	FILTER COVER	1	
130	370522	PACKING (B)	1	

OPTIONAL ACCESSORIES

ITEM NO.	CODE NO.	DESCRIPTION	NO. USED	REMARKS