SERVICE PARTS LIST

BULLETIN NO. 55-24-5520

SPECIFY CATALOG NO. AND SERIAL NO. WHEN ORDERING PARTS			REVISED BULLETIN	DATE Oct. 2012
1/2" (13mm) HAMMER-DRILL - 127V Brazil				
CATALOG NO.	**5374-59B**	STARTING SERIAL NO. **E65A**	WIRING INSTRUCTION **See Page Two**	

00 | 0 **EXAMPLE:** Component Parts (Small #) Are Included When Ordering The Assembly (Large #).

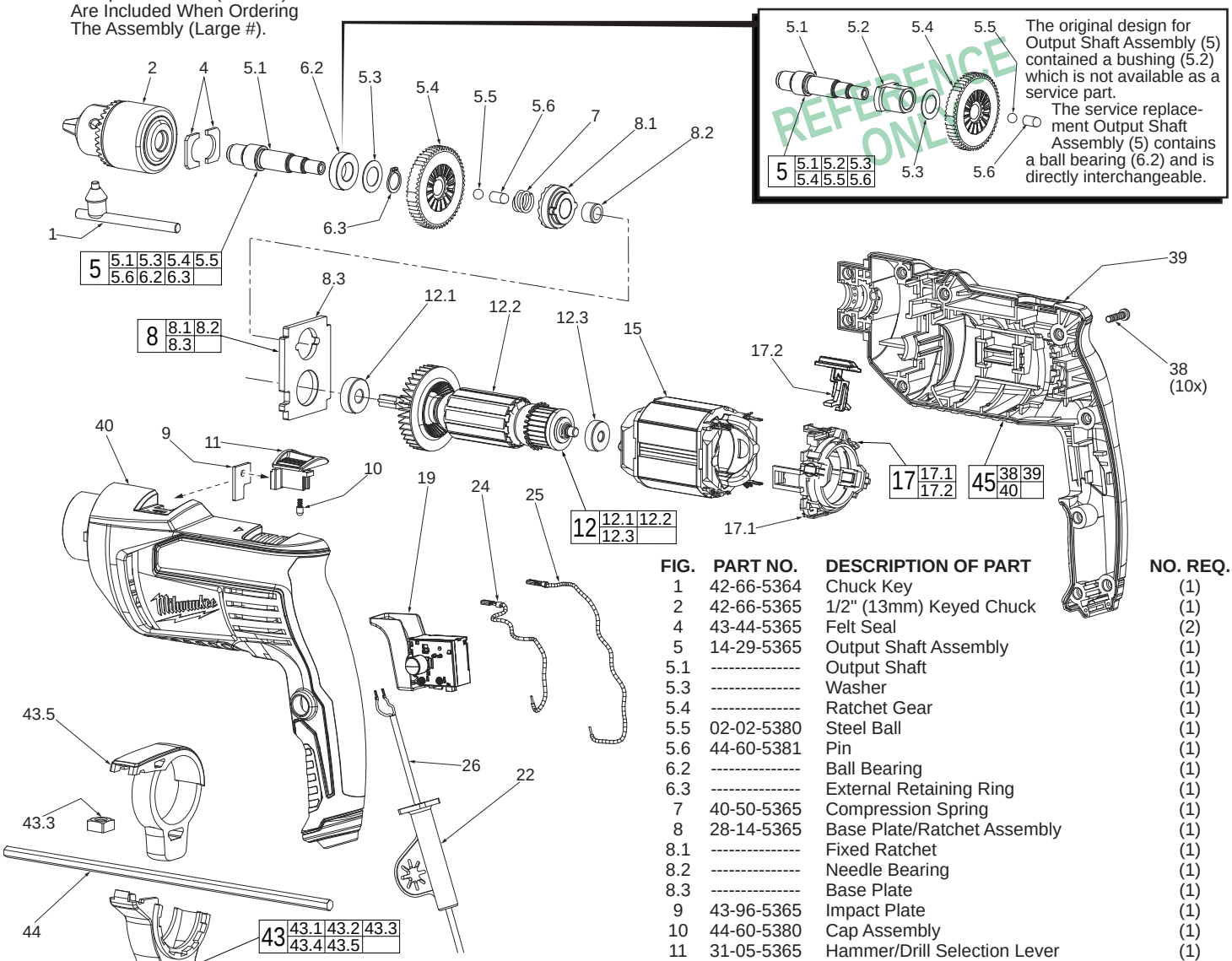

The original design for Output Shaft Assembly (5) contained a bushing (5.2) which is not available as a service part.

The service replacement Output Shaft Assembly (5) contains a ball bearing (6.2) and is directly interchangeable.

LUBRICATION NOTES:
Type 'E' Grease, No. 49-08-4122, 1lb. can

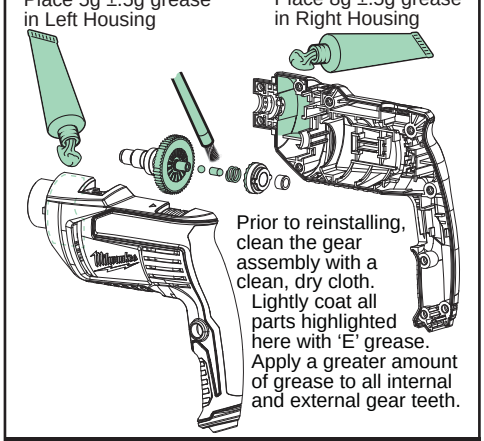

When servicing, remove 90-95% of the existing grease prior to installing Type 'E' grease. Original grease maybe similar in color but not compatible with 'E'.

FIG.	PART NO.	DESCRIPTION OF PART	NO. REQ.
1	42-66-5364	Chuck Key	(1)
2	42-66-5365	1/2" (13mm) Keyed Chuck	(1)
4	43-44-5365	Felt Seal	(2)
5	14-29-5365	Output Shaft Assembly	(1)
5.1	----------	Output Shaft	(1)
5.3	----------	Washer	(1)
5.4	----------	Ratchet Gear	(1)
5.5	02-02-5380	Steel Ball	(1)
5.6	44-60-5381	Pin	(1)
6.2	----------	Ball Bearing	(1)
6.3	----------	External Retaining Ring	(1)
7	40-50-5365	Compression Spring	(1)
8	28-14-5365	Base Plate/Ratchet Assembly	(1)
8.1	----------	Fixed Ratchet	(1)
8.2	----------	Needle Bearing	(1)
8.3	----------	Base Plate	(1)
9	43-96-5365	Impact Plate	(1)
10	44-60-5380	Cap Assembly	(1)
11	31-05-5365	Hammer/Drill Selection Lever	(1)
12	16-07-5366	Armature Assembly	(1)
12.1	02-04-5381	Ball Bearing	(1)
12.2	----------	Armature	(1)
12.3	02-04-5382	Ball Bearing	(1)
15	18-07-5368	Service Field	(1)
17	22-22-5365	110-120V Tension Ring/Brush Assembly	(1)
17.1	----------	Tension Ring with Brushes	(1)
17.2	31-44-5365	Forward/Reverse Lever	(1)
19	23-66-5367	Variable Speed Switch	(1)
22	44-76-5365	Cord Protector	(1)
24	23-94-5364	Leadwire Assembly-White	(1)
25	23-94-5365	Leadwire Assembly-Black	(1)
26	22-64-5360	Power Cord	(1)
38	05-88-1200	M4 x 16 Pan Hd. Plastite T-20 Screw	(10)
39	----------	Right Housing (Cover)	(1)
40	----------	Left Housing (Support)	(1)
43	14-34-5364	Side Handle Assembly	(1)
43.1	31-05-5366	Side Handle	(1)
43.2	05-88-5365	M8 x 1.25 Hex Bolt	(1)
43.3	05-88-5366	M8 Square Nut	(1)
43.4	31-05-5368	Carrier	(1)
43.5	31-05-5369	Lock Ring	(1)
44	31-05-5367	Depth Gauge	(1)
45	14-34-5365	Housing Assembly	(1)

MILWAUKEE ELECTRIC TOOL CORPORATION
13135 W. Lisbon Road, Brookfield, WI 53005

Drwg. 2

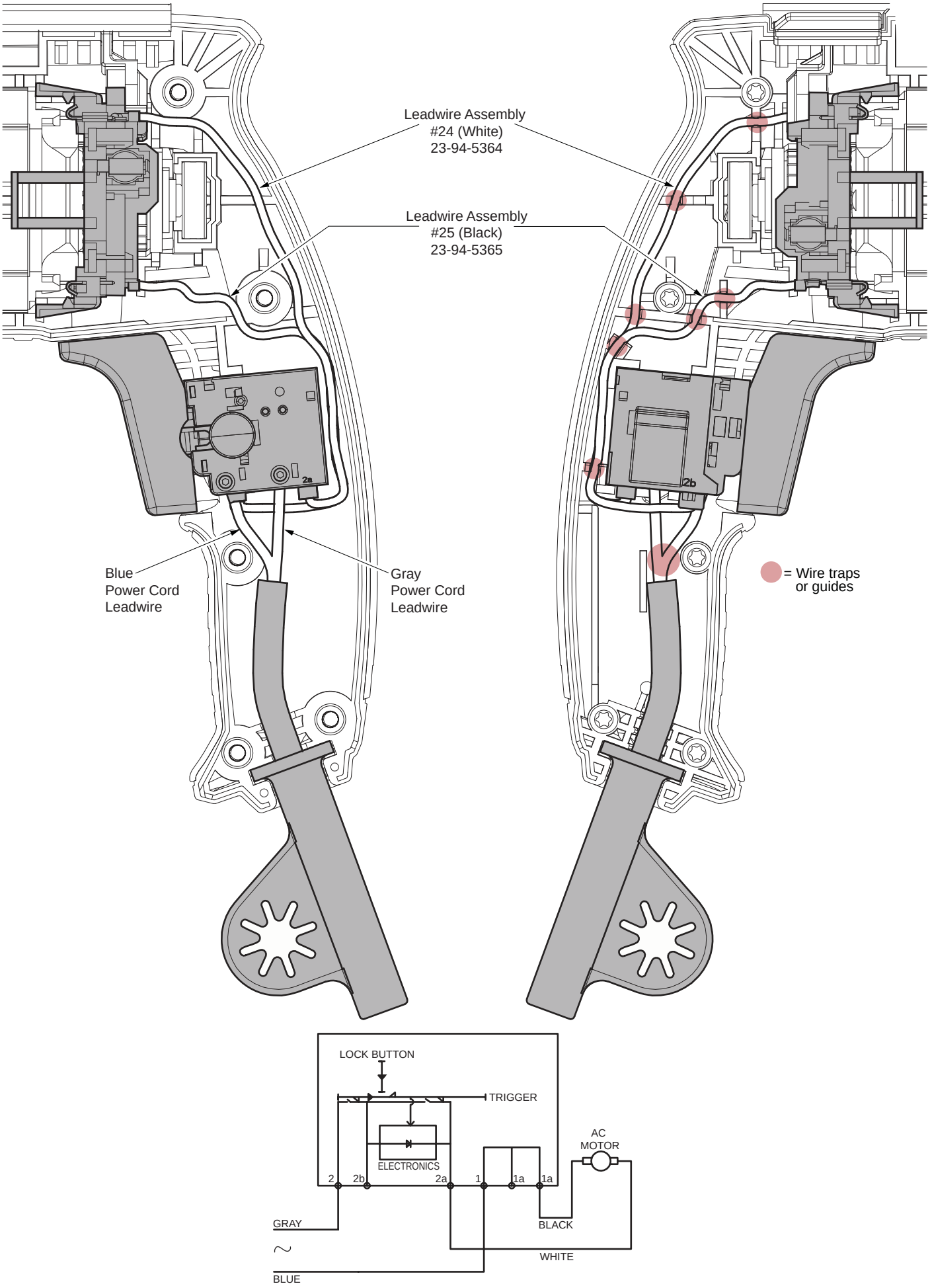
Leadwire Assembly
#24 (White)
23-94-5364
Leadwire Assembly
#25 (Black)
23-94-5365
2a
2b
Blue
Power Cord
Leadwire
Gray
Power Cord
Leadwire
= Wire traps
or guides
LOCK BUTTON
TRIGGER
ELECTRONICS
AC
MOTOR
2
2b
2a
1
1a
1a
GRAY
BLACK
WHITE
BLUE