1/2" CORDLESS DRIVER DRILL MODEL 6343DWAE

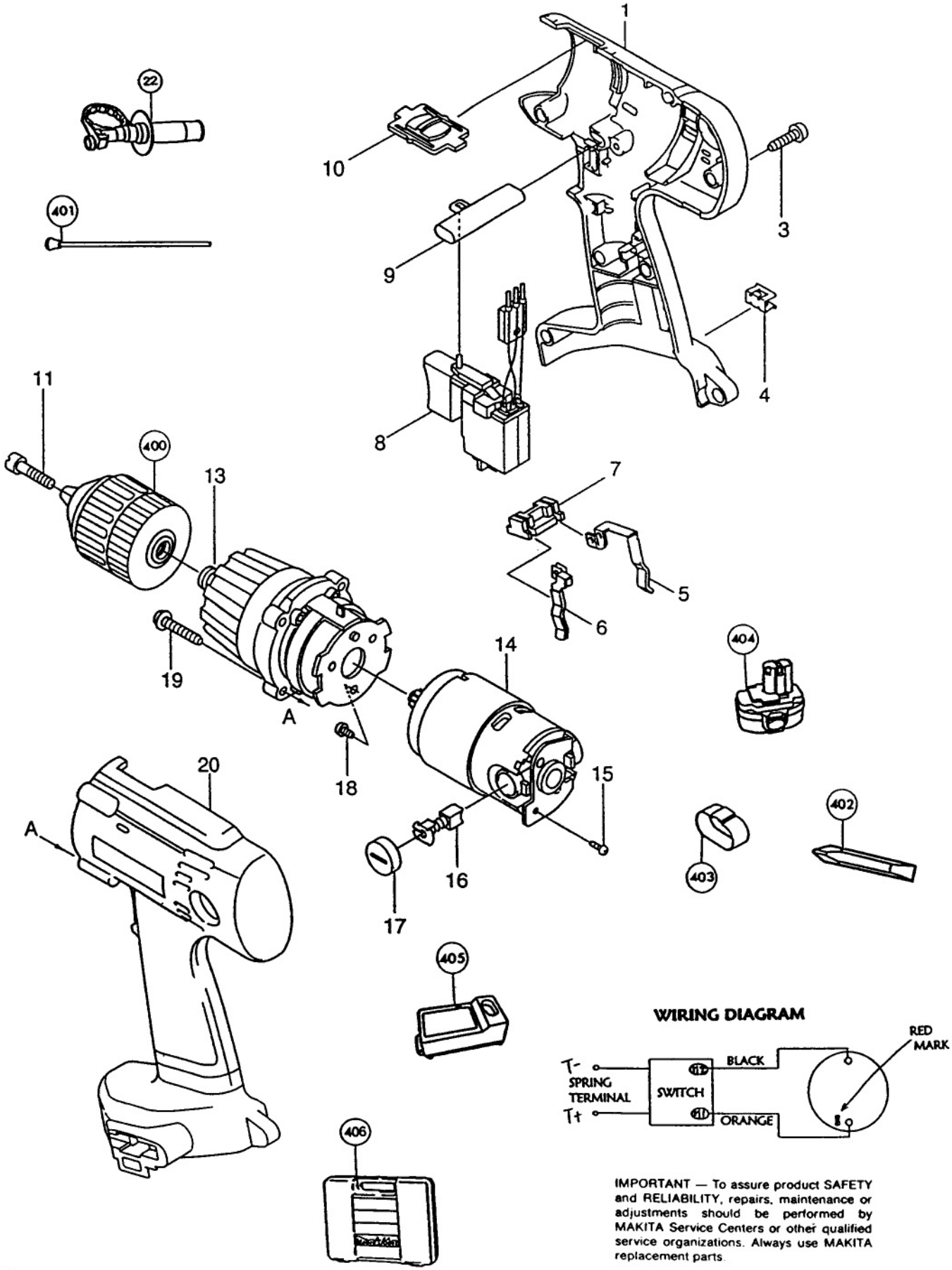

WIRING DIAGRAM

IMPORTANT — To assure product SAFETY and RELIABILITY, repairs, maintenance or adjustments should be performed by MAKITA Service Centers or other qualified service organizations. Always use MAKITA replacement parts.

Fig.	Part No.	Qty. Used	Description
1	183032-3	1	HOUSING Set (Incl. Fig. 20)
3	266130-9	8	T. SCREW BIND PT 3x16
4	344391-2	2	BIT HOLDER
5	654168-0	1	SPRING TERMINAL (+)
6	654169-8	1	SPRING TERMINAL (-)
7	687085-9	1	HOLDER
8	651968-9	1	SWITCH
9	416079-5	1	F/R CHANGE LEVER
10	125091-1	1	SPEED CHANGE LEVER (Incl. 2 ea. 231433-0 Compression Spring 4)
11	251465-1	1	F. H. SCREW M6x32
13	125088-0	1	GEAR HOUSING Ass'y
14	629729-5	1	DC MOTOR (Incl. Fig.16, 17 & 226361-2 Spur Gear 20)
15	911006-2	1	P.H. SCREW M3x8
16	191971-3	1	CARBON BRUSH Set
17	643929-3	2	HOLDER CAP
18	266134-1	3	T. SCREW ST 4x8
19	265999-8	4	T. SCREW FLANGE 4x25
20	183032-3	1	HOUSING Set (Incl. Fig. 1)
22	122575-0	1	GRIP Ass'y
ACCESSORIES			
400	763140-2	1	KEYLESS DRILL CHUCK 13
401	122576-8	1	STOPPER POLE
402	784614-0	1	PHILLIPS/SLOTTED BIT 2-45
403	414938-7	1	BATTERY COVER
404	192827-3	2	BATTERY 1822
405	DC1801	1	BATTERY CHARGER
406	824525-8	1	PLASTIC CARRYING CASE