SERVICE PARTS LIST

BULLETIN NO. 54-40-0321

SPECIFY CATALOG NO. AND SERIAL NO. WHEN ORDERING PARTS		REVISED BULLETIN 54-40-0320	DATE Nov. '86
DUAL RANGE VARI-SPEED SAWZALL		WIRING INSTRUCTION 58-01-0253	
CATALOG NO. 6508	STARTING SERIAL NO. 748-24000		

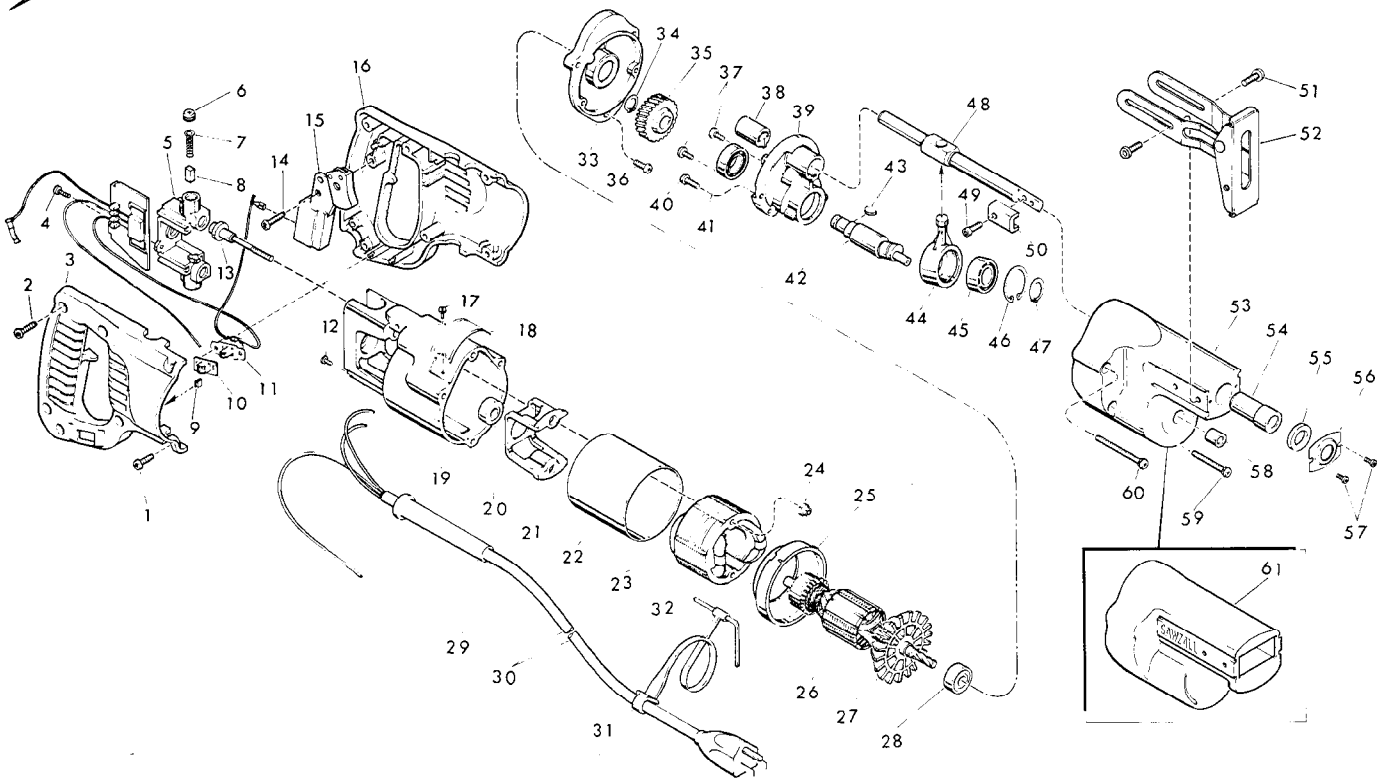

FIG.	PART NO.	DESCRIPTION OF PART	NO. REQ.
1	06-82-5316	8-32 × 1/2" Slot Pan Hd. Torx Screw	(4)
2	06-82-7260	7-18 × 5/8" Pan Hd. Plastite Torx Screw	(5)
★3	31-44-1466	Right Handle Half	(1)
4	06-95-0075	6-32 × 3/8" Truss Hd. Taptite Screw	(2)
5	22-22-1330	Brush Holder Assembly	(1)
6	23-44-0190	Brush Retaining Cap	(2)
7	23-52-0160	Brush Spring	(2)
8	22-16-0275	Carbon Brush	(2)
9	42-38-0240	Bumper	(2)
10	31-12-0190	Switch Cap	(1)
★11	14-20-0270	Switch Assembly	(1)
12	06-95-5150	6-32 × 1/4" Hex Hd. Taptite Sems	(1)
13	06-81-1058	8-32 × 2.19 Field Bolt	(2)
14	06-82-7260	7-18 × 5/8" Pan Hd. Plastite Torx Screw	(1)
★15	23-66-1470	Switch	(1)
★16	31-44-1471	Left Handle Half	(1)
17	06-85-0200	Nameplate Screw	(2)
★18	12-99-0362	Nameplate Blank	(1)
19	28-50-6201	Motor Housing	(1)
20	02-04-0845	Ball Bearing	(1)
21	31-55-0030	Coil Shield	(1)
22	23-16-0456	Field Insulator	(1)
23	18-30-0300	120V Field	(1)
24	06-57-2975	8-32 Flexlock Hex Nut	(2)
25	31-05-0050	Baffle	(1)
26	16-30-0425	120V. Armature (Includes Fig. No. 27)	(1)
27	22-84-0530	Fan Assembly	(1)
28	02-04-0911	Ball Bearing	(1)
29	44-76-0150	Cord Protector	(1)
30	22-64-0155	Cord Set	(1)
31	48-66-4080	Key Holder	(1)
32	49-96-0070	5/32" Socket Wrench	(1)
33	28-28-0345	Diaphragm	(1)
34	34-60-0920	External Retaining Ring	(1)
35	32-40-1920	Intermediate Gear	(1)
36	06-82-0015	8-32 × 5/8" Fil. Hd. Taptite Torx Screw	(1)
37	06-95-0075	6-32 × 3/8" Truss Hd. Taptite Screw	(2)
38	42-24-0250	Rear Spindle Bearing	(1)
39	28-72-1002	Bearing Plate	(1)
40	06-82-0020	8-32 × 1/2" Fil. Taptite Torx Screw	(2)
41	02-04-1510	Ball Bearing	(1)
42	36-92-0670	Wobble Shaft	(1)
43	06-42-1200	Woodruff Key	(1)
44	30-72-0060	Wobble Plate	(1)
45	02-04-1510	Ball Bearing	(1)
46	34-80-2355	Internal Retaining Ring	(1)
47	34-60-1200	Retaining Ring	(1)
48	38-50-5410	Reciprocating Spindle	(1)
49	06-75-2400	10 - 32 × 1/2" Pan Hd. Taptite Sems	(1)
50	42-68-0073	Blade Clamp	(1)
51	06-95-6270	10-24 × 1/2" Pan Hd. Taptite Sems	(4)
52	45-16-0495	Pivot Shoe Assembly	(1)
53	28-14-1780	Gear Case	(1)
54	42-24-0320	Spindle Bearing	(1)
55	45-06-0300	Felt Seal	(1)
56	44-86-0370	Seal Retainer	(1)
57	06-95-0050	4-40 × 3/16" Pan Hd. Taptite Screw	(2)
58	02-50-1640	Needle Bearing	(1)
59	06-82-5525	8-32 × 1-3/8" Fil. Hd. Taptite Torx Screw	(2)
60	06-82-5530	8-32 × 1-7/8" Fil. Hd. Taptite Torx Screw	(2)
61	45-12-0305	Gear Case Insulator	(1)

FIG. NOTES

40 Apply Type 242 Blue Loctite
34, 46, 47 - Burr Side Out
38 V-Notch Press In From Diaphragm Side

LUBRICATION

2-1/2 Oz. Type "B" Lubricant - Gear Case
1/2 Oz. Type "A" Lubricant - Bearing Plate/Intermediate Gear

MILWAUKEE ELECTRIC TOOL CORPORATION
13135 W. LISBON RD., BROOKFIELD, WIS. 53005