# SERVICE PARTS LIST

**BULLETIN NO. 54-42-5159**

| SPECIFY CATALOG NO. AND SERIAL NO. WHEN ORDERING PARTS | | | REVISED BULLETIN | DATE |
|---|---|---|---|---|
| **0-2500 RPM REV. DRYWALL SCREWDRIVER** | | | 54-42-5158 | Dec. '93 |
| **CATALOG NO. 6747-1** | STARTING SERIAL NO. | **453B** | WIRING INSTRUCTION **58-01-0023** | |

**EXAMPLE:**
00 | 0
Component Parts ( Small #) Are Included When Ordering The Assembly (Large #).

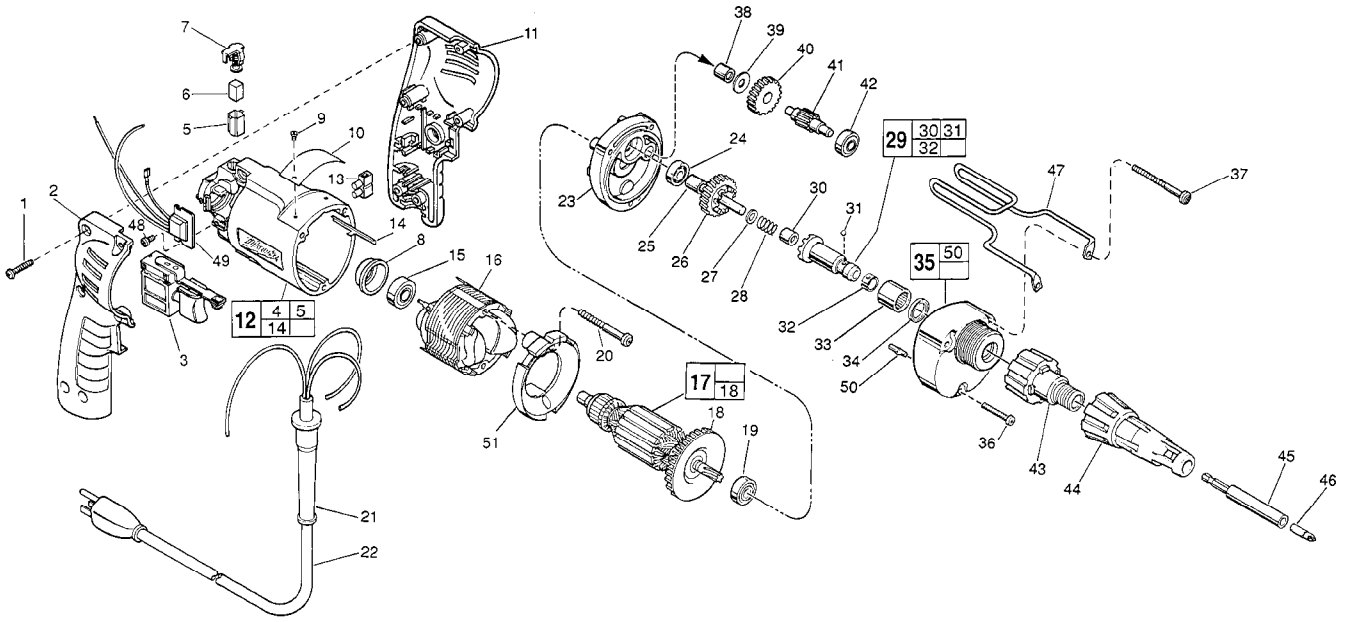


| FIG. | PART NO. | DESCRIPTION OF PART | NO. REQ. |
|---|---|---|---|
| 1 | 06-82-7284 | 8-16 x 3/4" Pan Hd. Slt. Plast. T-20 | (6) |
| 2 | 31-44-1745 | Right Handle Half | (1) |
| 3 | 23-66-2145 | Speed Control Switch | (1) |
| 4 | 23-94-6225 | Ground Wire Assembly (Not Shown) | (1) |
| 5 | 22-20-0830 | Brush Tube | (2) |
| 6 | 22-16-0275 | Carbon Brush | (2) |
| 7 | 23-52-1560 | Brush Spring Assembly | (2) |
| 8 | 22-72-0100 | Bearing Cup | (1) |
| 9 | 06-85-0200 | Nameplate Screw | (2) |
| 10 | 12-99-0850 | Service Nameplate | (1) |
| 11 | 31-44-1740 | Left Handle Half | (1) |
| 12 | 14-38-0600 | Motor Housing Assembly | (1) |
| 13 | 22-56-0456 | Terminal Block | (1) |
| 14 | 44-60-0530 | Ground Pin | (1) |
| 15 | 02-04-0645 | Ball Bearing | (1) |
| 16 | 18-11-0150 | 120 Volt Field | (1) |
| ★17 | 16-10-0690 | 120 Volt Armature | (1) |
| ★18 | 22-84-0880 | Fan Assembly | (1) |
| 19 | 02-04-0848 | Ball Bearing | (1) |
| ★20 | 06-82-7203 | 7-18 x 2-1/8" Pan Hd. Slt. Plast. T-20 | (2) |
| 21 | 44-76-0210 | Cord Protector | (1) |
| 22 | 22-64-1120 | Cord Set | (1) |
| 23 | 28-28-1960 | Diaphragm | (1) |
| 24 | 02-04-0645 | Ball Bearing | (1) |
| 25 | 45-36-1280 | Spacer | (1) |
| 26 | 32-10-4045 | Clutch Gear Assembly | (1) |
| 27 | 45-88-0712 | Thrust Washer | (1) |
| 28 | 40-50-6600 | Separator Spring | (1) |
| 29 | 42-66-0766 | Clutch Chuck Assembly | (1) |
| 30 | 02-50-2400 | Needle Bearing | (1) |
| 31 | 02-02-0130 | Steel Ball | (1) |
| 32 | 40-50-0510 | Bit Retaining Spring | (1) |
| 33 | 02-50-4220 | Needle Roller Bearing | (1) |
| 34 | 45-06-0106 | Oil Seal | (1) |

| FIG. | PART NO. | DESCRIPTION OF PART | NO. REQ. |
|---|---|---|---|
| 35 | 14-30-0600 | Gear Case Assembly | (1) |
| 36 | 06-82-7344 | 7-18 x 1-1/2" Pan Hd. Slt. Plast. T-20 | (1) |
| 37 | 06-82-7464 | 7-18 x 2-3/4" Pan Hd. Slt. Plast. T-20 | (2) |
| 38 | 02-50-2410 | Needle Bearing | (1) |
| 39 | 45-88-7990 | Thrust Washer | (1) |
| 40 | 32-40-1612 | Intermediate Gear | (1) |
| 41 | 36-66-4101 | Intermediate Pinion Shaft | (1) |
| 42 | 02-04-0640 | Ball Bearing | (1) |
| 43 | 48-32-2500 | Bit Housing | (1) |
| 44 | 49-26-1040 | Locator Assembly | (1) |
| 45 | 48-32-3065 | Magnetic Bit Holder | (1) |
| 46 | 48-32-1050 | #2 Insert Bit | (1) |
| 47 | 42-70-5080 | Belt Clip | (1) |
| 48 | 06-82-7212 | 4-20 x 1/4" Pan Hd. Slt. Plast. T-10 | (1) |
| 49 | 14-20-0650 | Remote Electronic Assembly | (1) |
| 50 | 06-65-0825 | 1/8 x 1/2 Groove Pin 5 | (1) |
| ★51 | 42-14-0380 | Baffle | (1) |

| FIG. | LUBRICATION |
|---|---|
| 35 | 1-1/2 Oz. Type "E" Grease, No. 49-08-4122. Place Near Intermediate Shaft Ball Bearing In Gear Case. |

| FIG. | NOTES |
|---|---|
| 1 | Torque to 18-22 In./Lbs. |
| 20,36, 37 | Torque to 15-20 In./Lbs. |
| 48 | Torque to 3-5 In./Lbs. |
| 8 | Place in motor housing before inserting armature. |
| 30,33 | Press only on end with manufacturer ID. |
| 33,38 | Press flush to casting surface. |
| 30 | Press 11/64" from clutch face. |
| 34 | Lip towards front of gear case. |
| 15,19,24 | Seal towards armature. |


**MILWAUKEE ELECTRIC TOOL CORPORATION**
13135 W. LISBON RD., BROOKFIELD, WI 53005