SERVICE PARTS LIST

BULLETIN NO. 54-42-5161

SPECIFY CATALOG NO. AND SERIAL NO. WHEN ORDERING PARTS			REVISED BULLETIN	DATE
0-2500 RPM REV. DRYWALL SCREWDRIVER			54-42-5160	Nov. '94
CATALOG NO. 6747-1	STARTING SERIAL NO.	**453D**	WIRING INSTRUCTION **58-01-0031**	

EXAMPLE:

00 | 0 — Component Parts (Small #) Are Included When Ordering The Assembly (Large #).

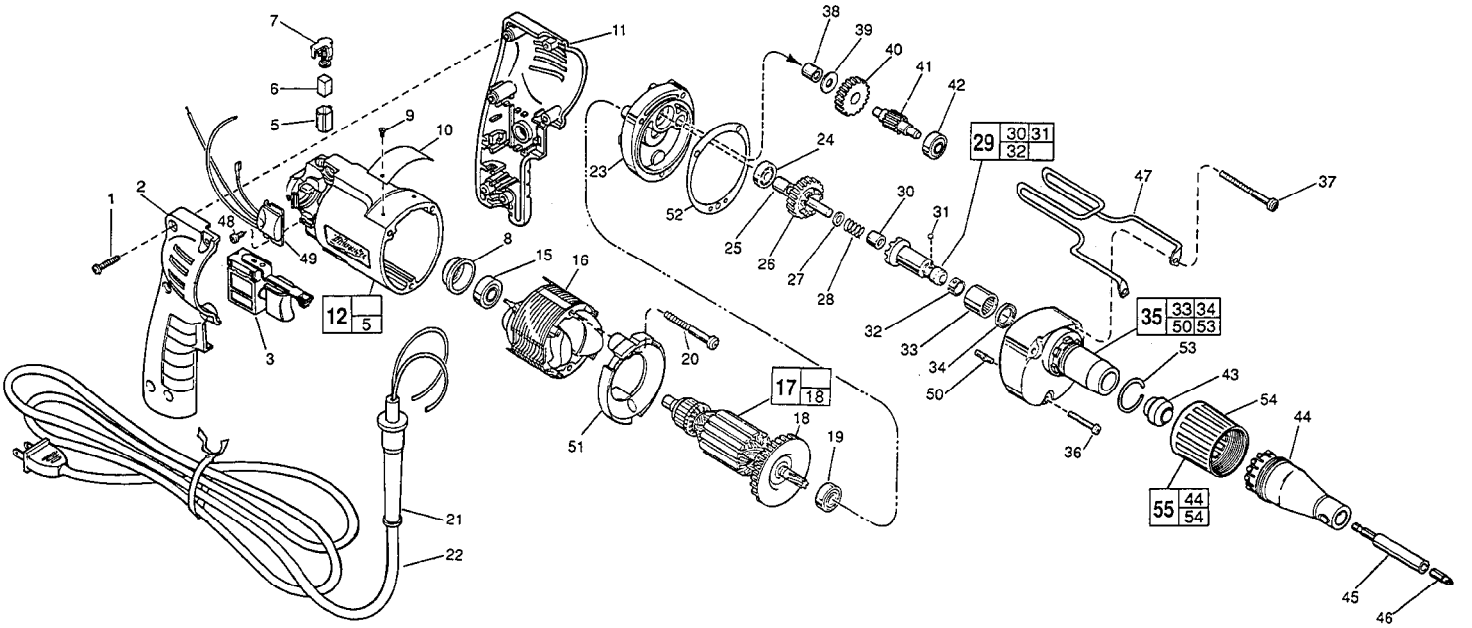

FIG.	PART NO.	DESCRIPTION OF PART	NO. REQ.
1	06-82-7284	8-16 x 3/4" Pan Hd. Slt. Plast. T-20	(6)
2	31-44-1745	Right Handle Half	(1)
3	23-66-2145	Speed Control Switch	(1)
5	22-20-0830	Brush Tube	(2)
6	22-16-0275	Carbon Brush	(2)
7	23-52-1570	Brush Spring Assembly	(2)
8	22-72-0100	Bearing Cup	(1)
★ 9	06-72-1720	Nameplate Rivet	(2)
10	12-99-0860	Service Nameplate	(1)
11	31-44-1740	Left Handle Half	(1)
★ 12	14-38-0591	Motor Housing Assembly	(1)
15	02-04-0645	Ball Bearing	(1)
16	18-11-0150	120 Volt Field	(1)
17	16-10-0690	120 Volt Armature	(1)
18	22-84-0880	Fan Assembly	(1)
19	02-04-0851	Ball Bearing	(1)
20	06-82-7203	7-18 x 2-1/8" Pan Hd. Slt. Plast. T-20	(2)
21	44-76-0210	Cord Protector	(1)
22	22-64-0891	Cord Set	(1)
23	28-28-1961	Diaphragm	(1)
24	02-04-0645	Ball Bearing	(1)
25	45-36-1280	Spacer	(1)
26	32-10-4045	Clutch Gear Assembly	(1)
27	45-88-0712	Thrust Washer	(1)
28	40-50-6600	Separator Spring	(1)
29	42-66-0775	Clutch Chuck Assembly	(1)
30	02-50-2400	Needle Bearing	(1)
31	02-02-0130	Steel Ball	(1)
32	40-50-0510	Bit Retaining Spring	(1)
33	02-50-4220	Needle Roller Bearing	(1)
34	45-06-0570	Oil Seal	(1)
35	14-30-0740	Gear Case Assembly	(1)
36	06-82-7344	7-18 x 1-1/2" Pan Hd. Slt. Plast. T-20	(1)
37	06-82-7464	7-18 x 2-3/4" Pan Hd. Slt. Plast. T-20	(2)
38	02-50-2410	Needle Bearing	(1)
39	45-88-7990	Thrust Washer	(1)
40	32-40-1612	Intermediate Gear	(1)
41	36-66-4101	Intermediate Pinion Shaft	(1)
42	02-04-0645	Ball Bearing	(1)
43	30-37-0045	Guide	(1)
44	31-51-0090	Locator	(1)
45	48-32-3065	Magnetic Bit Holder	(1)
46	48-32-1050	#2 Insert Bit	(1)
47	42-70-5080	Belt Clip	(1)
48	06-82-7212	4-20 x 1/4" Pan Hd. Slt. Plast. T-10	(1)
49	14-20-0750	Remote Electronic Assembly	(1)
50	06-65-0825	1/8 x 1/2 Groove Pin 5	(1)
51	42-14-0380	Baffle	(1)
52	43-44-0925	Gasket	(1)
53	44-90-0401	Locator Ring	(1)
54	31-58-0510	Locator Sleeve	(1)
55	49-26-1035	Locator Assembly	(1)

FIG.	LUBRICATION
35	1-1/2 Oz. Type "E" Grease, No. 49-08-4122. Place Near Intermediate Shaft Ball Bearing In Gear Case.

FIG.	NOTES
1	Torque to 18-28 In./Lbs.
20,36, 37	Torque to 15-20 In./Lbs.
48	Torque to 3-5 In./Lbs.
8	Place in motor housing before inserting armature.
30,33,38	Press only on end with manufacturer ID.
38	Press flush to casting surface.
33	Press 13/64" from cast surface.
30	Press 11/64" from clutch face.
34	Spring side towards rear of gear case.
15,42,24	Seal towards armature.

MILWAUKEE ELECTRIC TOOL CORPORATION
13135 W. LISBON RD., BROOKFIELD, WI 53005