F012691199

Stand / Issue 00-06-01

Fig./Abb. 1

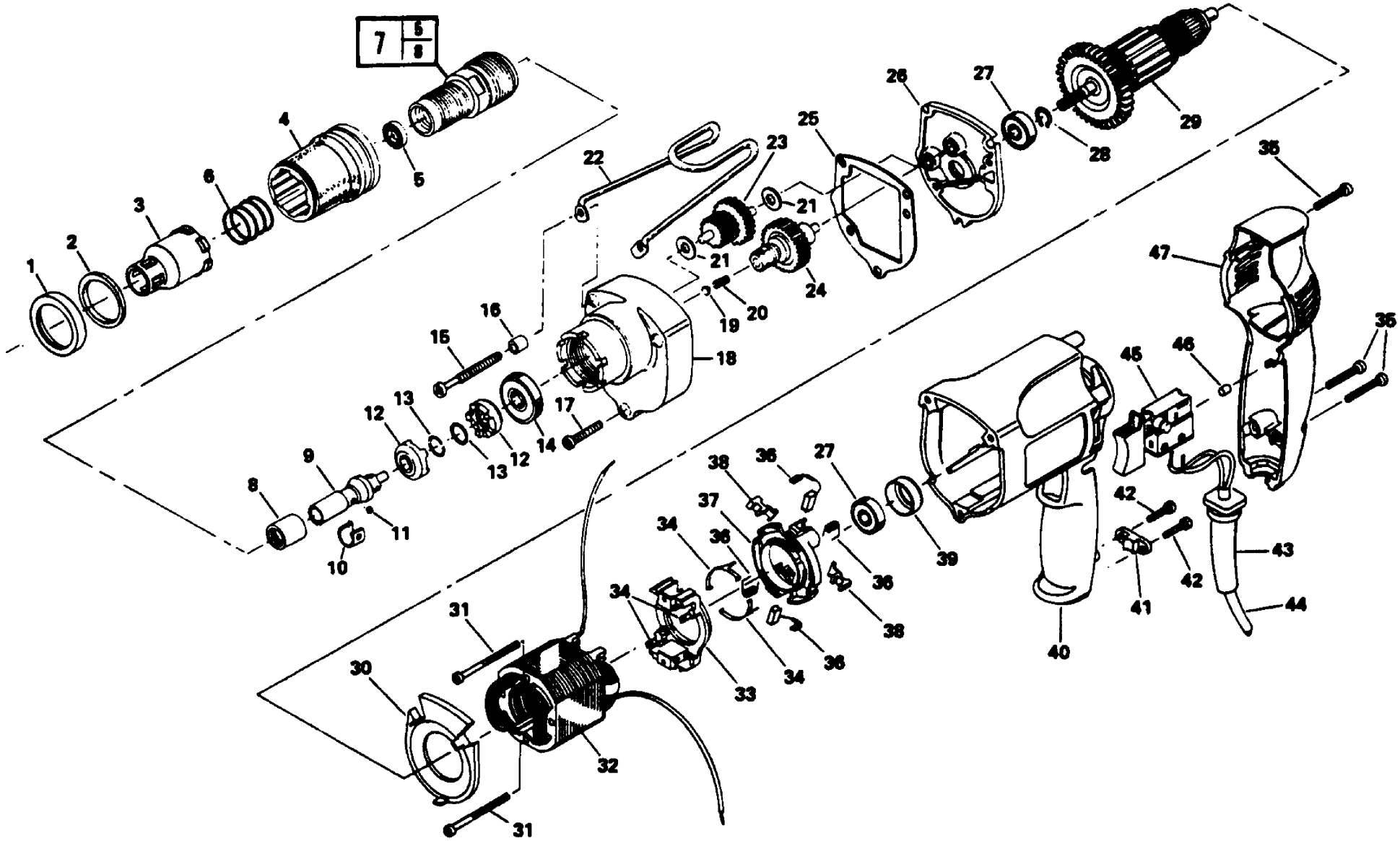

ƒnderungen vorbehalten
Modifications reserved
Modifications reservees
Salvo modificaciones