Makita Canada Inc.

makita

12V IMPACT DRIVER

Model 6980FDWAE(MCA)

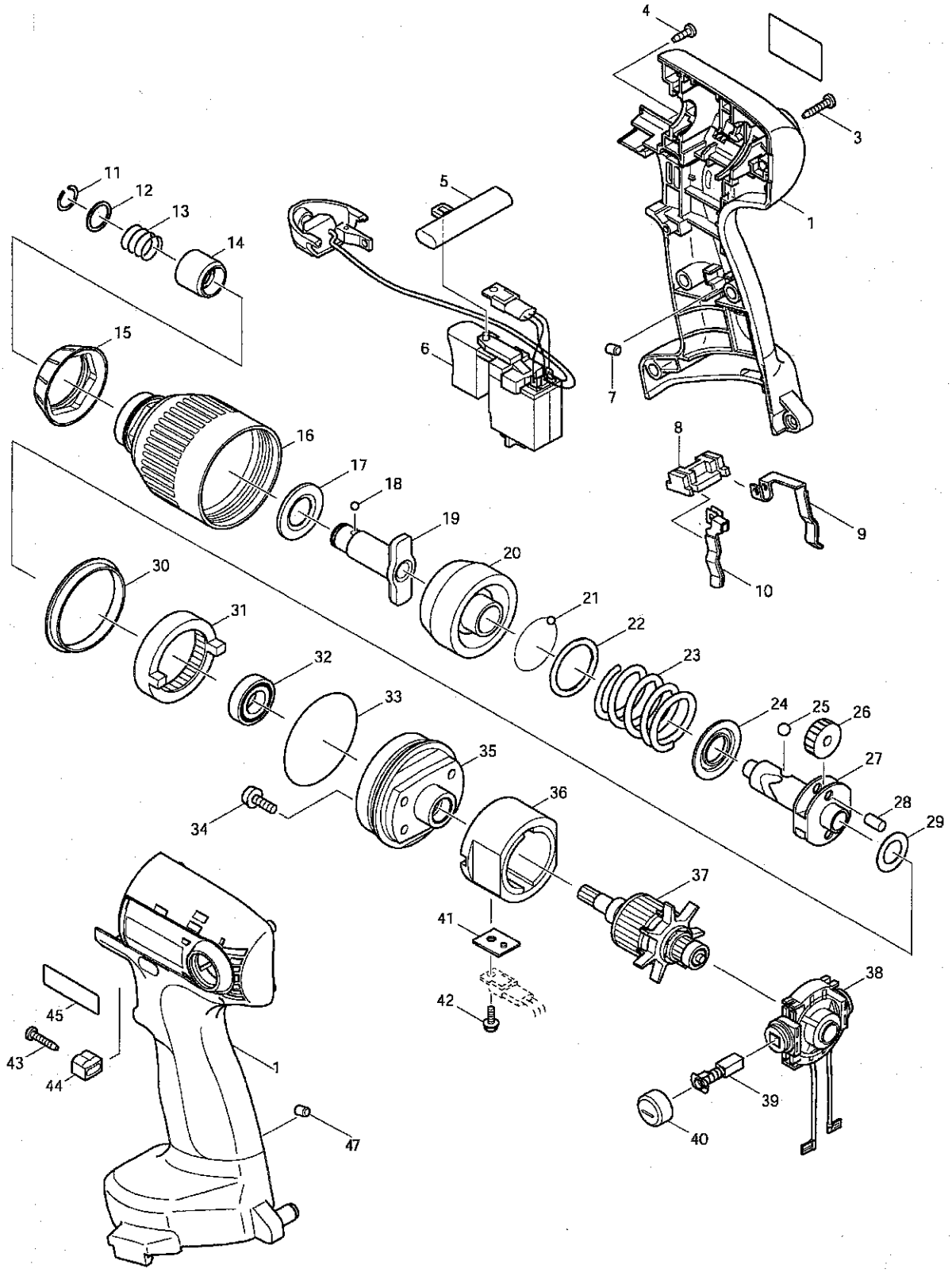

02-2005

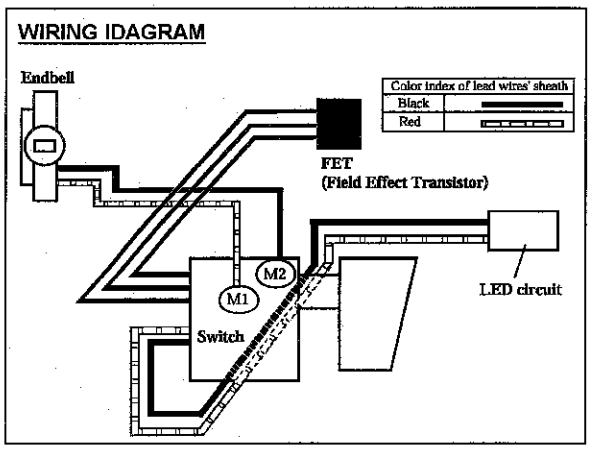

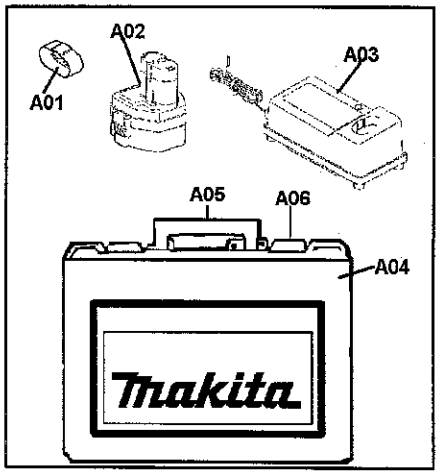

Item No.	Part No.	No. Used	Description
1	183774-9	1	Housing Set (Includes Item 45)
3	266130-9	8	Tapping Screw Bind PT 3X16
4	266007-8	1	Tapping Screw Bind PT 3X10
5	416079-5	1	F/R Change Lever
6	638326-6	1	Switch Unit
7	263024-9	1	Rubber Pin 4
8	687085-9	1	Holder
9	654168-0	1	Spring Terminal (+)
10	654169-8	1	Spring Terminal (-)
11	231951-8	1	Ring Spring 11
12	267085-1	1	Flat Washer 12
13	233005-7	1	Compression Spring 13
14	324420-7	1	Sleeve
15	421847-3	1	Bamper
16	153808-2	1	Hammer Case Com.
17	261108-7	1	Nylon Washer 14
18	216001-0	2	Steel Ball 3.5
19	324432-0	1	Anvil M
20	324262-9	1	Hammer
21	216001-0	24	Steel Ball 3.5
22	267175-0	1	Flat Washer 24
23	233274-0	1	Compression Spring 25
24	267766-7	1	Cup Washer 14
25	216011-7	2	Steel Ball 5.6
26	226336-1	2	Spur Gear 22
27	324220-5	1	Spindle
28	256253-1	2	Pin 5
29	267212-0	1	Flat Washer 12
30	257254-2	1	Ring 41
31	227112-6	1	Internal Gear 51
32	211150-8	1	Ball Bearing 6901ZZ
33	213620-3	1	O Ring 46
34	911516-9	4	P.H. Screw M4X12
35	317597-5	1	Internal Gear Case
36	638155-7	1	York Unit
37	619084-3	1	Armature
38	638156-5	1	Endbell Com.
39	193466-2	2	Carbon Brush CB-434 (2pcs/Set)
40	643933-2	2	Brush Holder Cap
41	689096-0	1	FET Spacer
42	266170-7	1	Tapping Screw ST3X8
43	266130-9	1	Tapping Screw Bind PT 3X16
44	313118-1	1	Stopper
45	819720-3	1	Makita Label
47	263024-9	1	Rubber Pin 4
Accessories			
A01	414938-7	1	Battery Cvover
A02	192598-2	1	12V Ni-Cad Battery 1222 (2.0Ah) (See Catalogue for other Batteries)
A03	DC1414	1	Charger DC1414 For 7.2V ~ 14.4V, 1.3Ah ~ 3.0Ah (For Other Chargers, See Catalogue)
A04	183763-4	1	Plastic Carrying Case (Includes Items
A05	417723-7	1	Handle
A06	417724-5	2	Latch

Service Repair Tools

181573-3 - Makita Grease N No.2
1R045 - Large Gear Extractor