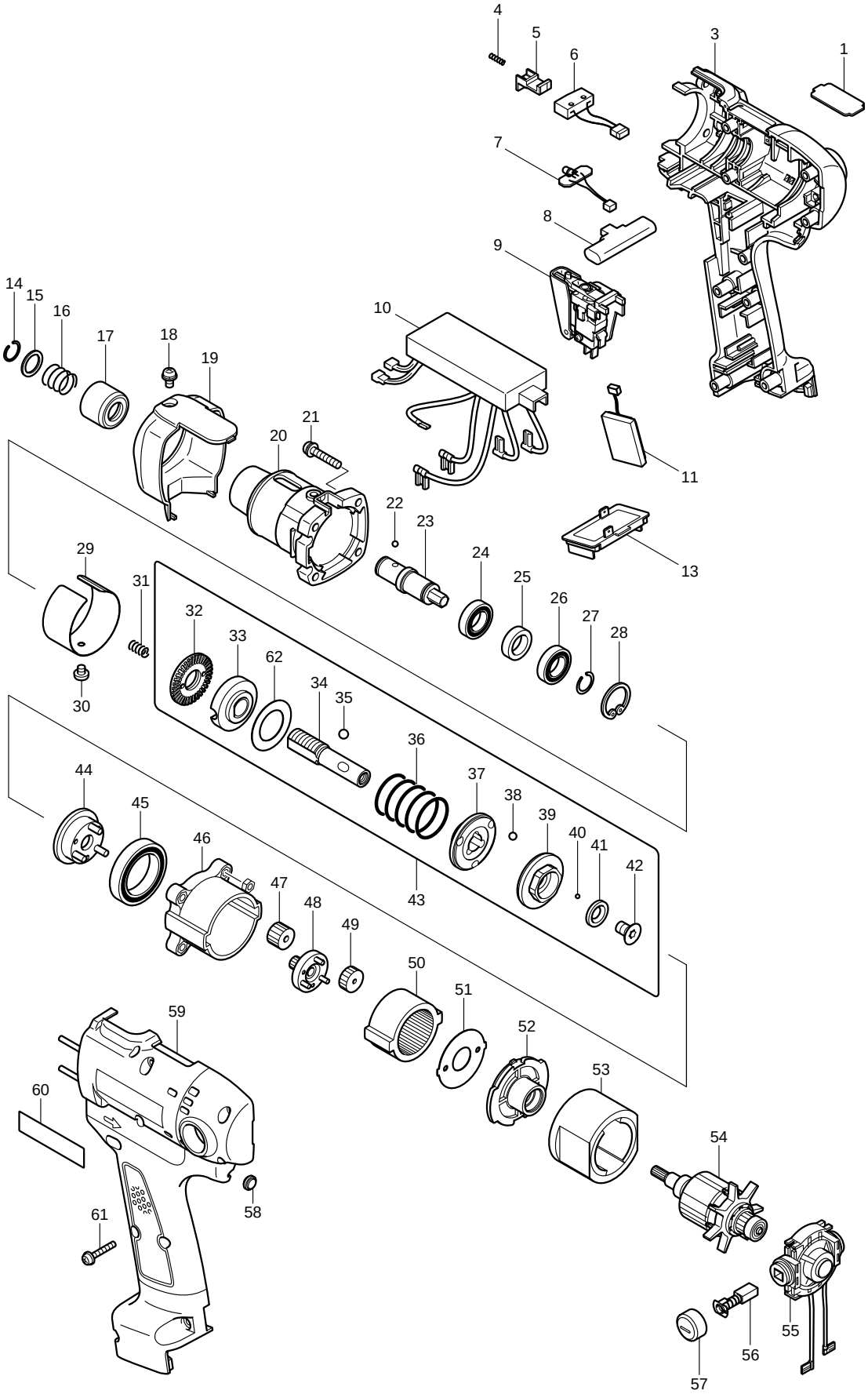
1
2
3
4
5
6
7
8
9
10
11
12
13
14
15
16
17
18
19
20
21
22
23
24
25
26
27
28
29
30
31
32
33
34
35
36
37
38
39
40
41
42
43
44
45
46
47
48
49
50
51
52
53
54
55
56
57
58
59
60
61
62

Item No.	Part No.	Qty. Used	Description
1	345345-2	1	PLATE I
3	183629-8	1	HOUSING SET (INCL. FIG. 59,60)
4	233025-1	1	COMPRESSION SPRING 2
5	418002-6	1	SWITCH LEVER
6	638274-9	1	SWITCH UNIT
7	631513-6	1	LED CIRCUIT
8	417511-2	1	F/R CHANGE LEVER
9	650536-5	1	SWITCH C3Z-5-01
10	631560-7	1	CONTROLLER
11	631514-4	1	BUZZER CIRCUIT
13	643800-1	1	TERMINAL
14	231965-7	1	RING SPRING 10
15	267143-3	1	FLAT WASHER 11
16	233005-7	1	COMPRESSION SPRING 13
17	162218-2	1	SLEEVE
18	911108-4	1	PAN HEAD SCREW M4X8
19	418289-0	1	CLUTCH CASE COVER
20	317694-7	1	CLUTCH CASE
21	911143-2	4	PAN HEAD SCREW M4X22
22	216019-1	2	STEEL BALL 3
23	324377-2	1	SPINDLE M
24	211136-2	1	BALL BEARING 6801LLB
25	257011-8	1	RING 12
26	211136-2	1	BALL BEARING 6801LLB
27	231951-8	1	RING SPRING 11
28	962111-8	1	RETAINING RING R-21
29	345351-7	1	RING 38I
30	265127-5	1	PAN HEAD SCREW M4X14
31	233019-6	1	COMPRESSION SPRING 5
32	324281-5	1	LOCK NUT M12
33	153442-8	1	ADJUST RING COMPLETE
34	324296-2	1	SPINDLE
35	216018-3	3	STEEL BALL 5.0
36	233358-4	1	COMPRESSION SPRING 19C
37	223146-7	1	CAM D
38	216024-8	3	STEEL BALL 4
39	223139-4	1	CAM A
40	216019-1	13	STEEL BALL 3
41	267247-1	1	FLAT WASHER 7
42	266305-0	1	TORX C.S.H. SCREW M5X10
44	153444-4	1	CARRIER COMPLETE B
45	211375-4	1	BALL BEARING 6805LLB
46	418004-2	1	GEAR CASE
47	227052-8	3	SPUR GEAR 18
48	153448-6	1	SPUR GEAR 9 COMPLETE B
49	227051-0	3	SPUR GEAR 19
50	227048-9	1	INTERNAL GEAR 47
51	267774-8	1	LOCK WASHER
52	418003-4	1	MOTOR BRACKET
53	638191-3	1	YOKE UNIT
54	619127-1	1	ARMATURE
55	638195-5	1	ENDBELL COMPLETE
56	193466-2	1	CARBON BRUSH CB-434 SET
57	643933-2	2	BRUSH HOLDER CAP
58	416764-0	1	LENS
59	183629-8	1	HOUSING SET (INCL. FIG. 3,60)
60	819063-3	1	MAKITA LABEL
61	911038-9	8	PAN HEAD SCREW M3X20
62	267276-4	1	FLAT WASHER 18
ACCESSORIES			
43	125225-6	1	CLUTCH ASS'Y G (INCL. FIG. 32~42, & 62)
A01	765025-8	1	TORQUE ADJUST TOOL