Chicago Pneumatic

CP0200B22L / CP0200B22L-2F

Sand Rammer

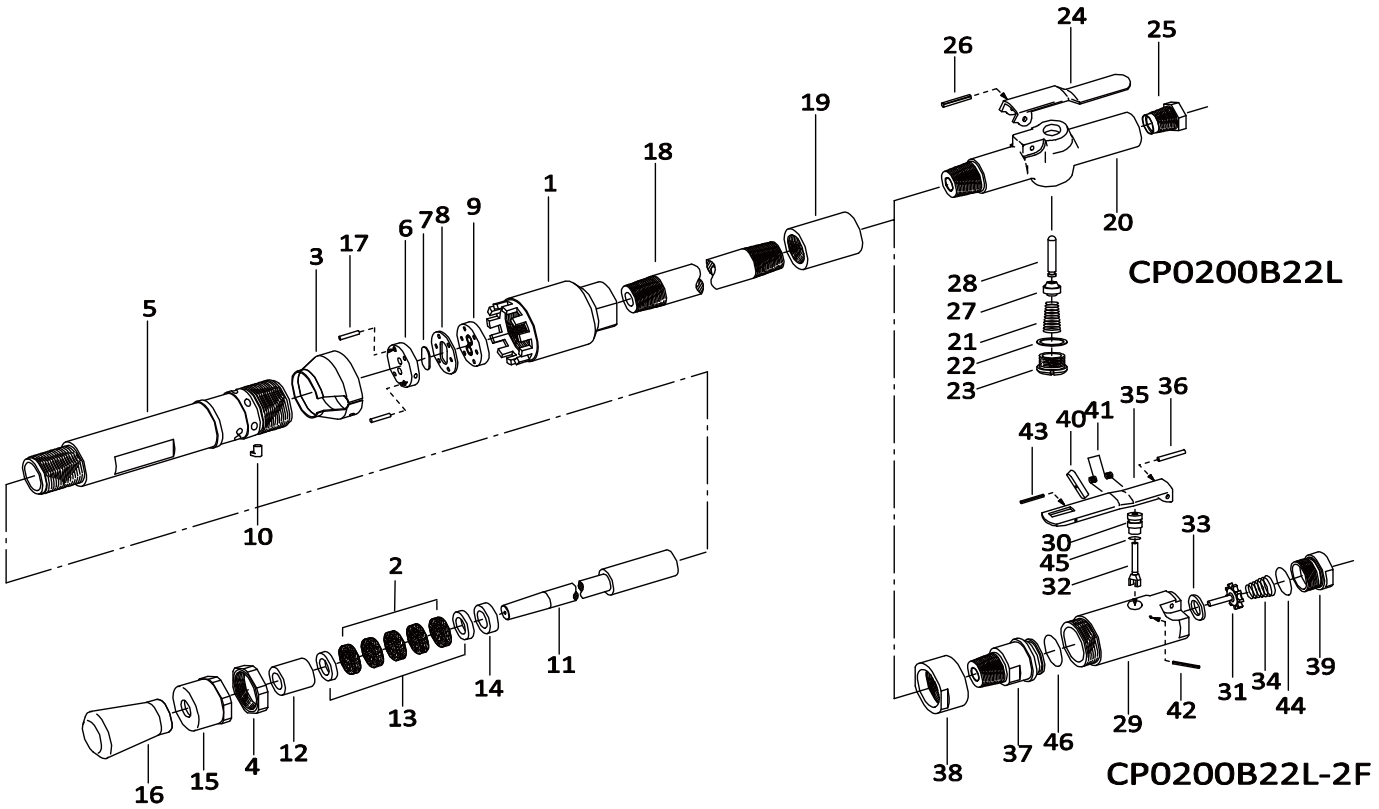

Index No.	Part No.	Description	Qty.
1	5412055465	Cap	1
2	5412055451	Felt Ring	5
3	5412055452	Exhaust Cover	1
4	5412055453	Lock Nut	1
5	5412102969	Cylinder CP0200B22L	1
5	5412102970	Cylinder CP0200B22L-2F	1
10	5412055456	Locking Clutch	1
11	5412055459	Piston	1
15	5412055464	Grand	1
16	5412055534	Rubber Butt	1
18	5412055444	Pipe	1
19	5412054336	Socket Joint	1
20	5412055440	Throttle Valve Body	1
25	5412054484	Inlet Bushing	1
29	5412058775	Throttle Valve Body	1
37	5412058781	Throttle Valve Stem	1
38	5412058783	Throttle Valve Stem Nut	1
39	5412076996	Inlet Joint <NPT>	1
A	**8940170211**	**Valve Kit**	
6		Valve Sheet	1
7		Valve	1
8		Valve Case	1
9		Valve Cover	1
17		Pin	2
B	**8940170212**	**Packing Kit**	
12		Piston Bushing	1
13		Leather Packing	2
14		Packing Sheet	1
C	**8940170207**	**Throttle B22L Kit**	
21		Throttle Valve Spring	1
22		Throttle Valve Cover Packing	1
23		Throttle Valve Cover	1

Index No.	Part No.	Description	Qty.
27		Throttle Valve	1
28		Throttle Valve Rod	1
D	**8940170208**	**Lever B22L Kit**	
24		Throttle Valve Lever	1
26		Spring Pin	1
E	**8940170202**	**Throttle Kit 2F Model**	
30		Throttle Valve Bushing	1
32		Throttle Valve Rod	1
42		Spring Pin	1
45		"O" Ring	1
F	**8940170203**	**Throttle Valve Kit 2F Model**	
31		Throttle Valve	1
33		Throttle Valve Sheet	1
34		Throttle Valve Spring	1
44		"O" Ring	1
G	**8940170204**	**Safety Lever Kit 2F Model**	
35		Throttle Valve Lever	1
36		Throttle Valve Lever Pin	1
40		Lock Key	1
41		Lock Spring	1
43		Spring Pin	1
H	**8940170210**	**Tune-up Kit**	
44		"O" Ring	1
45		"O" Ring	1
46		"O" Ring	1
I	**8940170215**	**Small Part Kit B22L**	
	include 7, 17, 26,		
J	**8940170277**	**Small Part Kit B22L-2F**	
	include 7, 17, 36, 41, 42, 43		

6159948780	Safety instructions	1
2050558133	Operator's manual	1
5412060277	Warning Label	1

Spare parts without part number are not sold separately - High wear parts underlined

Contact us at www.cp.com