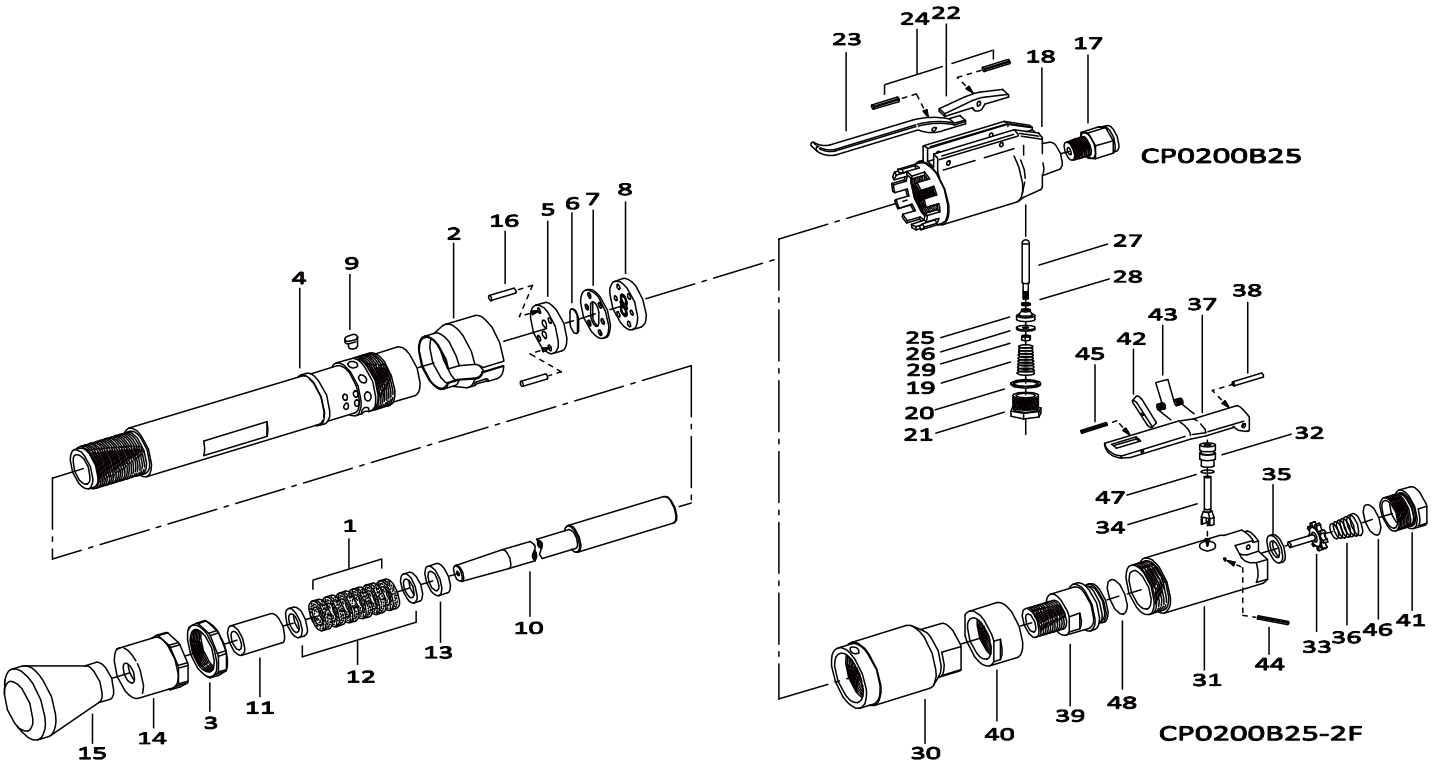

Index No.	Part No.	Description	Qty.
1	5412055488	Felt Ring	6
2	5412055489	Exhaust Cover	1
3	5412055490	Lock Nut	1
4	5412102971	Cylinder CP0200B25	1
4	5412102972	Cylinder CP0200B25-2F	1
9	5412055496	Locking Clutch	1
10	5412055497	Piston	1
14	5412055501	Grand	1
15	5412055535	Rubber Butt	1
17	5412054487	Inlet Bushing	1
18	5412055472	Cap	1
30	5412055485	Cap	1
31	5412058775	Throttle Valve Body	1
39	5412058781	Throttle Valve Stem	1
40	5412058783	Throttle Valve Stem Nut	1
41	5412076996	Inlet Joint<NPT>	1
A	**8940170216**	**Valve Kit**	
5		Valve Sheet	1
6		Valve	1
7		Valve Case	1
8		Valve Cover	1
16		Pin	2
B	**8940170217**	**Packing Kit**	
11		Piston Bushing	1
12		Leather Packing	2
13		Packing Sheet	1
C	**8940170218**	**Throttle B25 Kit**	
19		Throttle Valve Spring	1
20		Throttle Valve Cover Packing	1
21		Throttle Valve Cover	1
25		Throttle Valve	1
26		Throttle Valve Collar	1
27		Throttle Valve Rod	1

Index No.	Part No.	Description	Qty.
28		Plain Washer	1
29		Nut	1
D	**8940170219**	**Lever B25 Kit**	
22		Throttle Valve Lever	1
23		Throttle Valve Lever (B)	1
24		Spring Pin	2
E	**8940170202**	**Throttle Kit 2F Model**	
32		Throttle Valve Bushing	1
34		Throttle Valve Rod	1
44		Spring Pin	1
47		"O" Ring	1
F	**8940170203**	**Throttle Valve Kit 2F Model**	
33		Throttle Valve	1
35		Throttle Valve Sheet	1
36		Throttle Valve Spring	1
46		"O" Ring	1
G	**8940170204**	**Safety Lever Kit 2F Model**	
37		Throttle Valve Lever	1
38		Throttle Valve Lever Pin	1
42		Lock Key	1
43		Lock Spring	1
45		Spring Pin	1
H	**8940170210**	**Tune-up Kit**	
46		"O" Ring	1
47		"O" Ring	1
48		"O" Ring	1
I	**8940170220**	**Small Part Kit B25**	
	include 6, 16, 24		
J	**8940170279**	**Small Part Kit B25-2F**	
	include 6, 16, 38, 43, 44, 45		

6159948780	Safety instructions	1
2050558133	Operator's manual	1
5412060277	Warning Label	1

Spare parts without part number are not sold separately - High wear parts underlined

Contact us at www.cp.com