metabo HPT

ELECTRIC TOOL PARTS LIST

■ CORDLESS MULTI TOOL 2015 • 12 • 22
Model CV 18DBL (E1a)

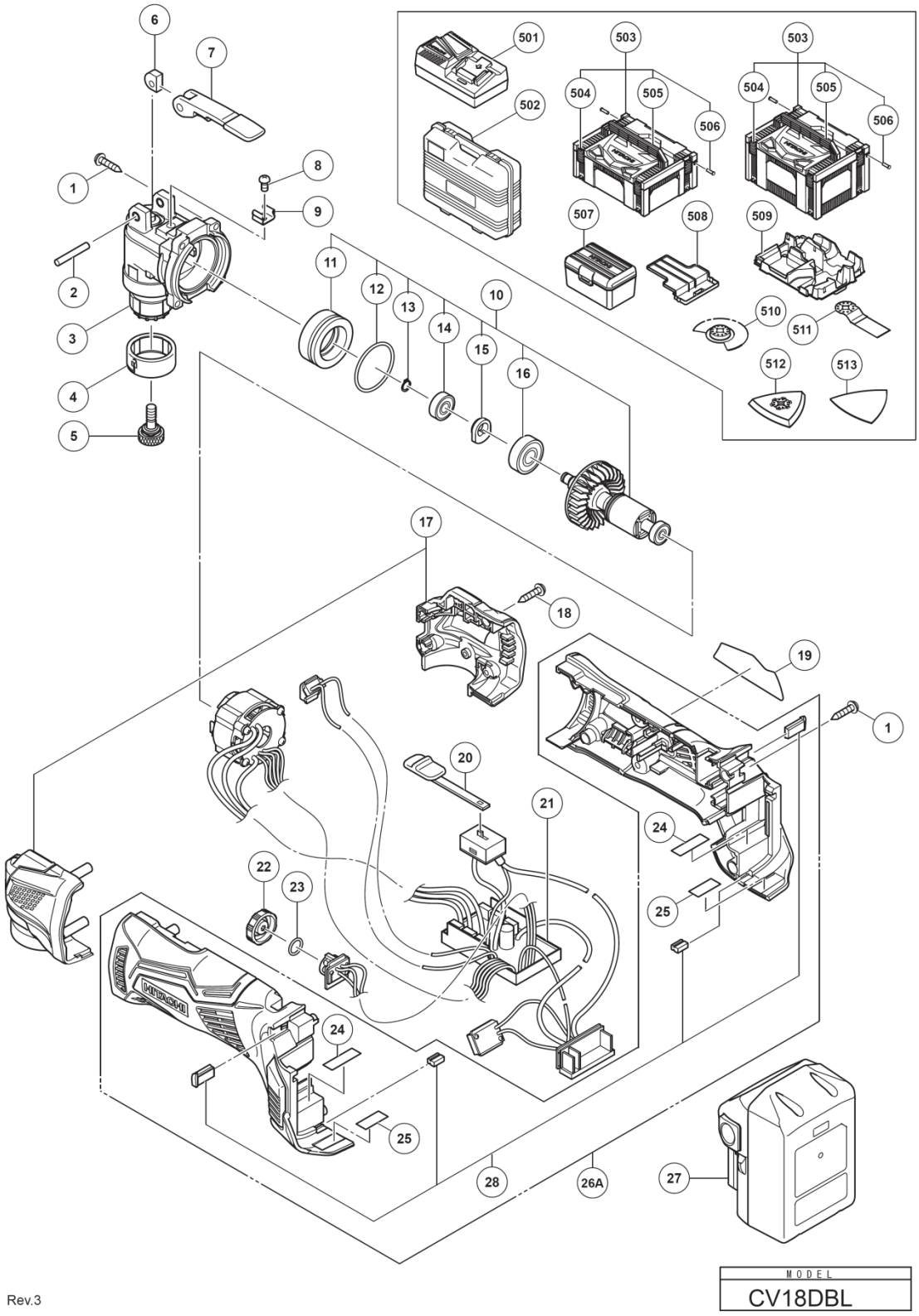

Rev.3

PARTS

CV18DBL

ITEM NO.	CODE NO.	DESCRIPTION	NO. USED	REMARKS
1	301653	TAPPING SCREW (W/FLANGE) D4X20 (BLACK)	10	
2	337668	NEEDLE ROLLER	1	
3	338437	HEAD CASE	1	
4	337665	SLEEVE CAP	1	
5	337671	TOOL SHAFT	1	
6	337667	PUSHING PIECE	1	
7	337666	LEVER	1	
8	337670	SEAL LOCK SCREW M4X6	1	
9	337669	LEVER GUIDE	1	
10	337398	ROTOR ASS'Y	1	INCLUD.11-16
11	337663	BEARING HOLDER	1	
12	337664	O-RING (S-35)	1	
13	994251	RETAINING RING FOR D7 SHAFT	1	
14	337674	BALL BEARING-R 607DD	1	
15	337402	BALANCER	1	
16	6000VV	BALL BEARING 6000VVCMPS2L	1	
17	337395	HEAD COVER (A).(B) SET	1	
18	313687	TAPPING SCREW (W/FLANGE) D3X16 (BLACK)	4	
19		NAME PLATE	1	
20	337396	SWITCH KNOB	1	
21	337400	WIRING	1	
22	337397	DIAL	1	
23	987105	O-RING (S-10)	1	
24	338435	RUBBER CUSHION	2	
25	338434	RUBBER CUSHION (B)	2	
26A	339254	HOUSING (A).(B) SET	1	INCLUD.24.25.28
*27	335788	BATTERY BSL 1825 (EUROPE.AUS.NZL)	2	INCLUD.508
*27	330068	BATTERY BSL 1830 (EUROPE.AUS.NZL)	2	INCLUD.508
*27	334905	BATTERY BSL 1830 (KOR)	2	INCLUD.508
*27	335790	BATTERY BSL 1850 (EUROPE.AUS.NZL)	2	INCLUD.508
28	339256	BUMPER SET	1	

STANDARD ACCESSORIES

CV18DBL

ITEM NO.	CODE NO.	DESCRIPTION	NO. USED	REMARKS
511	335881	MULTI TOOL BLADE (MD28PB)	1	

OPTIONAL ACCESSORIES

ITEM NO.	CODE NO.	DESCRIPTION	NO. USED	REMARKS
501		CHARGER (MODEL UC 18YFSL)	1	
502	337684	CASE	1	
503	336471	CASE ASS'Y (STACKABLE 2)	1	INCLUD.504-506
*503	337108	CASE ASS'Y (STACKABLE 3)	1	INCLUD.504-506 FOR AUS
504	336472	LATCH	4	
505	336473	HANDLE	1	
506	336474	HINGE	2	
507	337685	TOOL BOX	1	
508	329897	BATTERY COVER	1	
509	337937	INNER TRAY	1	
510	335868	MULTI TOOL BLADE (MW85S)	1	
512	335903	MULTI TOOL PAD (MU93D)	1	
*513	338252	SANDING PAPERS 94X94 AA60 (10 PCS.)	1	
*513	338252	SANDING PAPERS 94X94 AA60 (10 PCS.)	3	FOR AUS.NZL
*513	338253	SANDING PAPERS 94X94 AA80 (10 PCS.)	1	
*513	338254	SANDING PAPERS 94X94 AA100 (10 PCS.)	1	
*513	338255	SANDING PAPERS 94X94 AA120 (10 PCS.)	1	
*513	338255	SANDING PAPERS 94X94 AA120 (10 PCS.)	3	FOR AUS.NZL
*513	338257	SANDING PAPERS 94X94 AA180 (10 PCS.)	1	
*513	338258	SANDING PAPERS 94X94 AA240 (10 PCS.)	3	FOR AUS.NZL