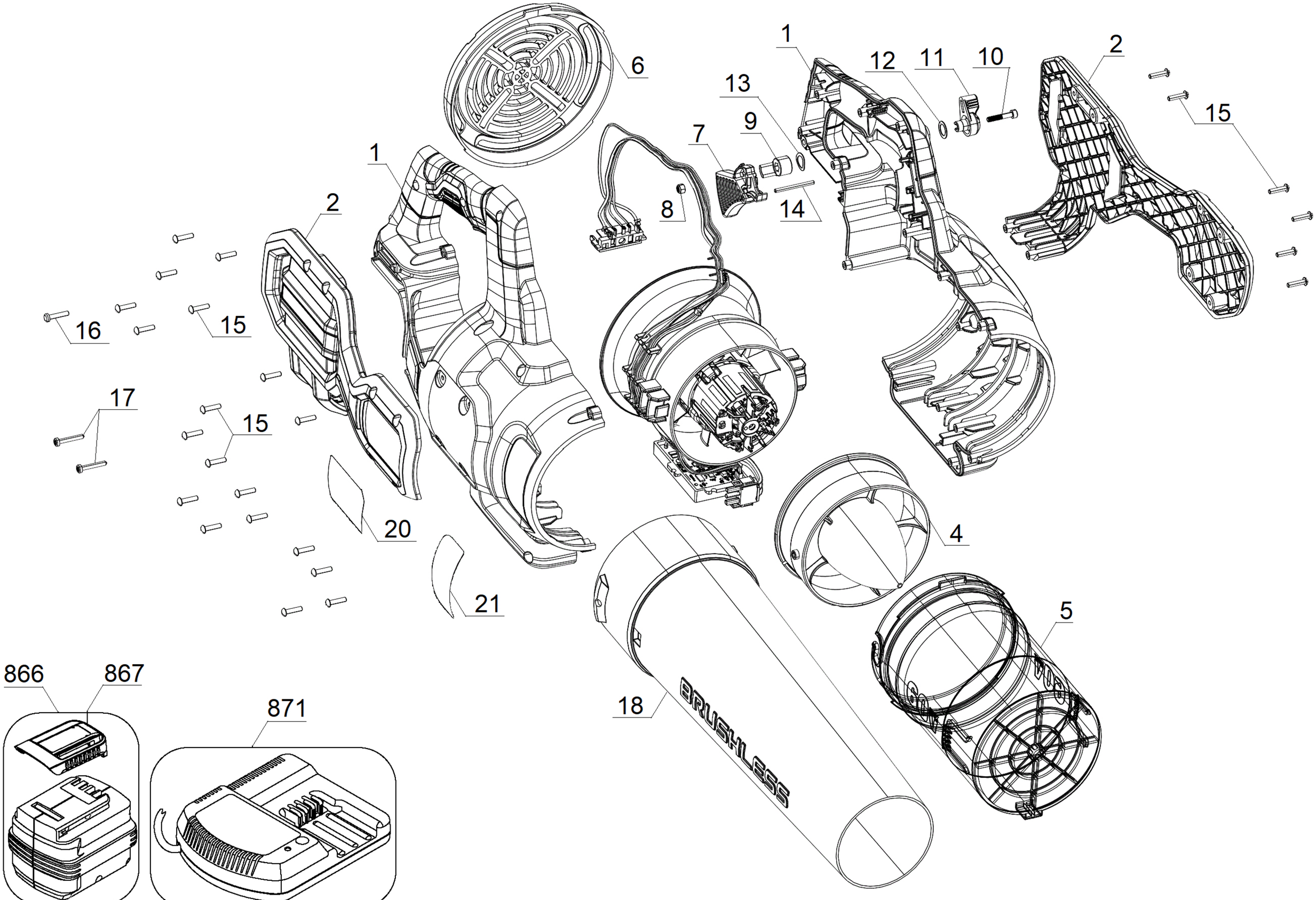
6
1
12
11
10
2
13
9
7
15
1
2
8
14
16
15
17
15
20
4
21
5
866
867
871
18
BRUSHLESS