HITACHI

LIST NO. F827

ELECTRIC TOOL PARTS LIST

■ CORDLESS DRIVER DRILL

1998·10·20

Model DS 14DVA

(E1)

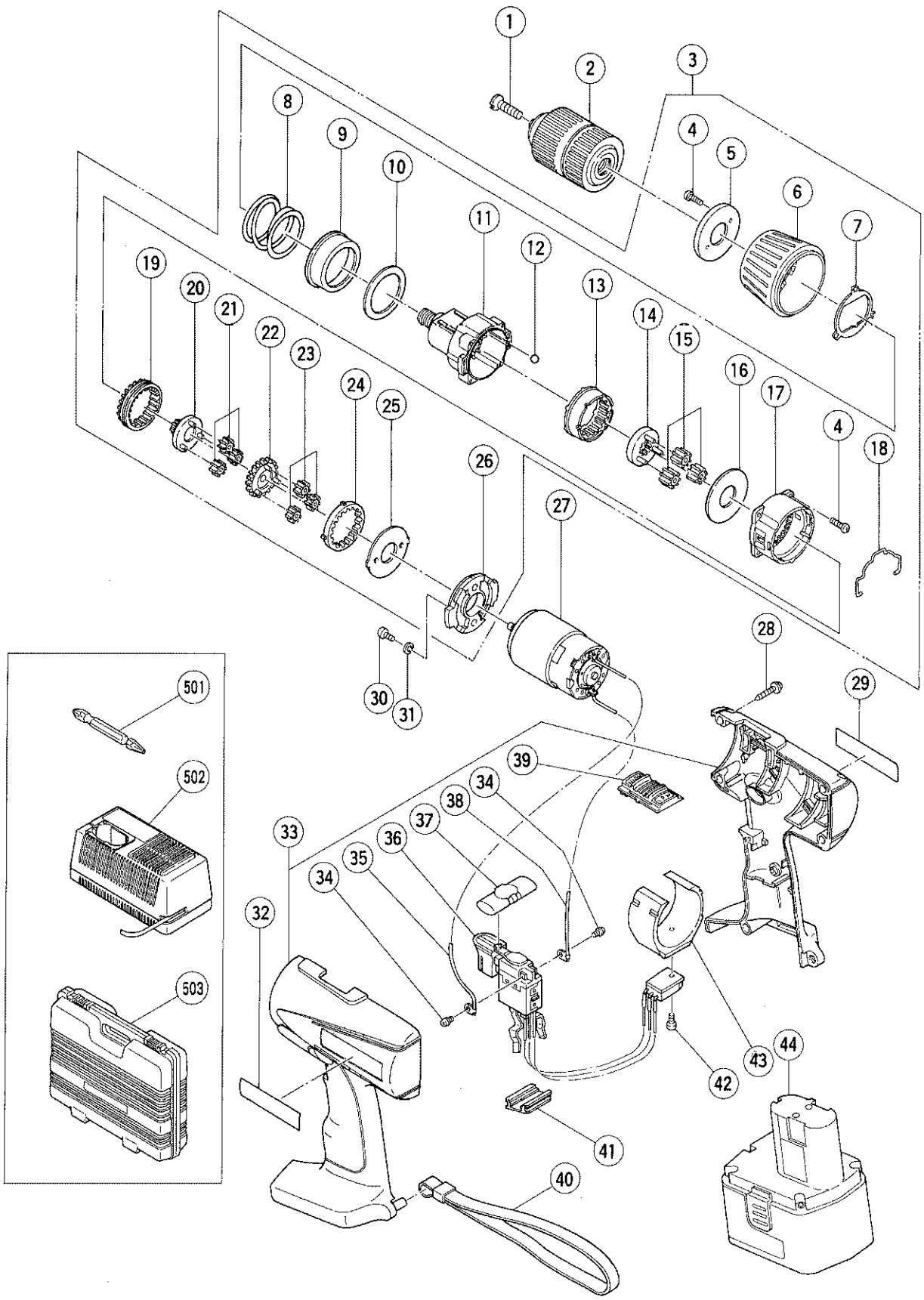

ITEM NO.	CODE NO.	DESCRIPTION	NO. USED	REMARKS	
1	311-959	SPECIAL SCREW (LEFT HAND) M6X23	1		
2	315-966	DRILL CHUCK 13VLRC-N (W/O CHUCK WRENCH)	1		
3	315-802	GEAR BOX ASS'Y	1	INCLUD.4-26	
4	315-817	SCREW SET D3X12 (6 PCS.)	6		
5	315-813	PLATE	1		
6	315-812	CAP	1		
7	315-811	CLUTCH PLATE	1		
8	315-810	SPRING	1		
9	315-809	SPRING HOLDER	1		
10	315-808	THRUST PLATE	1		
11	315-803	FRONT CASE	1		
12	306-936	STEEL BALL D5	6		
13	312-715	RING GEAR	1		
14	315-806	CARRIER	1		
15	312-705	PLANET GEAR (C) SET (3 PCS.)	3		
16	312-704	WASHER (A)	1		
17	312-697	REAR CASE	1		
18	311-962	SHIFT ARM	1		
19	315-137	SLIDE RING GEAR	1		
20	315-805	PINION (C)	1		
21	315-816	PLANET GEAR (B) SET (3 PCS.)	3		
22	315-804	PINION (B)	1		
23	315-815	PLANET GEAR (A) SET (3 PCS.)	3		
24	315-136	FIRST RING GEAR	1		
25	312-716	WASHER (B)	1		
26	316-955	MOTOR SPACER	1		
27	317-064	MOTOR	1		
28	991-672	TAPPING SCREW (W/WASHER) D3X16	8		
29		NAME PLATE	1		
30	949-214	MACHINE SCREW M4X6 (10 PCS.)	2		
31	949-453	SPRING WASHER M4 (10 PCS.)	2		
32		HITACHI LABEL	1		
33	317-065	HOUSING (A).(B) SET	1		
34	994-532	MACHINE SCREW (W/SP. WASHER) M3X5	2		
35	315-143	INTERNAL WIRE	1		
36	315-140	DC-SPEED CONTROL SWITCH	1		
37	306-151	PUSHING BUTTON	1		
38	315-142	INTERNAL WIRE	1		
39	311-961	SHIFT KNOB	1		
40	306-952	STRAP	1		
41	315-141	TERMINAL SUPPORT (A)	1		
42	306-039	BIND SCREW M3X7	1		
43	315-821	FIN	1		
44	316-953	BATTERY EB 14S (W/ENGLISH N.P)	1		

* : ALTERNATIVE PARTS

STANDARD ACCESSORIES

ITEM NO.	CODE NO.	DESCRIPTION	NO. USED	REMARKS	
501	983-006	+ DRIVER BIT NO.2 65L	1		
502		CHARGER (MODEL UC 14YF)	1		
503	317-066	CASE	1		

OPTIONAL ACCESSORIES

ITEM NO.	CODE NO.	DESCRIPTION	NO. USED	REMARKS	
601	983-004	+ DRIVER BIT NO.1 65L	1		
602	983-011	+ DRIVER BIT NO.3 65L	1		
603	955-657	- DRIVER BIT (A) 3MMX70L	1		
604	955-659	- DRIVER BIT (A) 4MMX70L	1		
605	955-674	- DRIVER BIT (A) 6MMX70L	1		
606	308-090	HOOK (FOR CORDLESS TOOLS)	1		
607	307-824	HOLSTER	1		

★ : ALTERNATIVE PARTS