# DW451S2

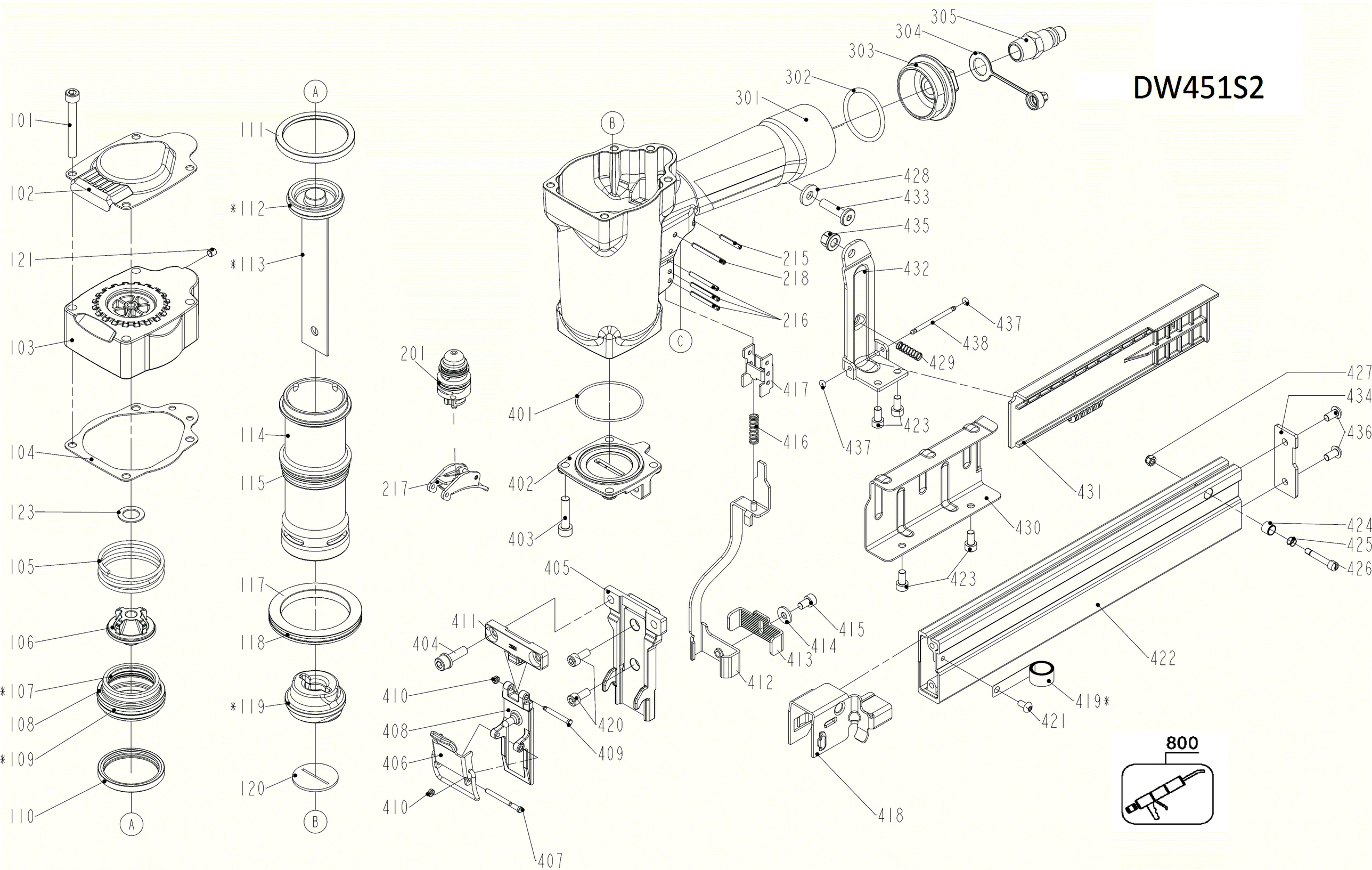


IP 1530-1RB 12/18

TO BE USED WITH PARTS LIST IP1530-2 AND OPERATION AND MANTENANCE MANUAL N565321