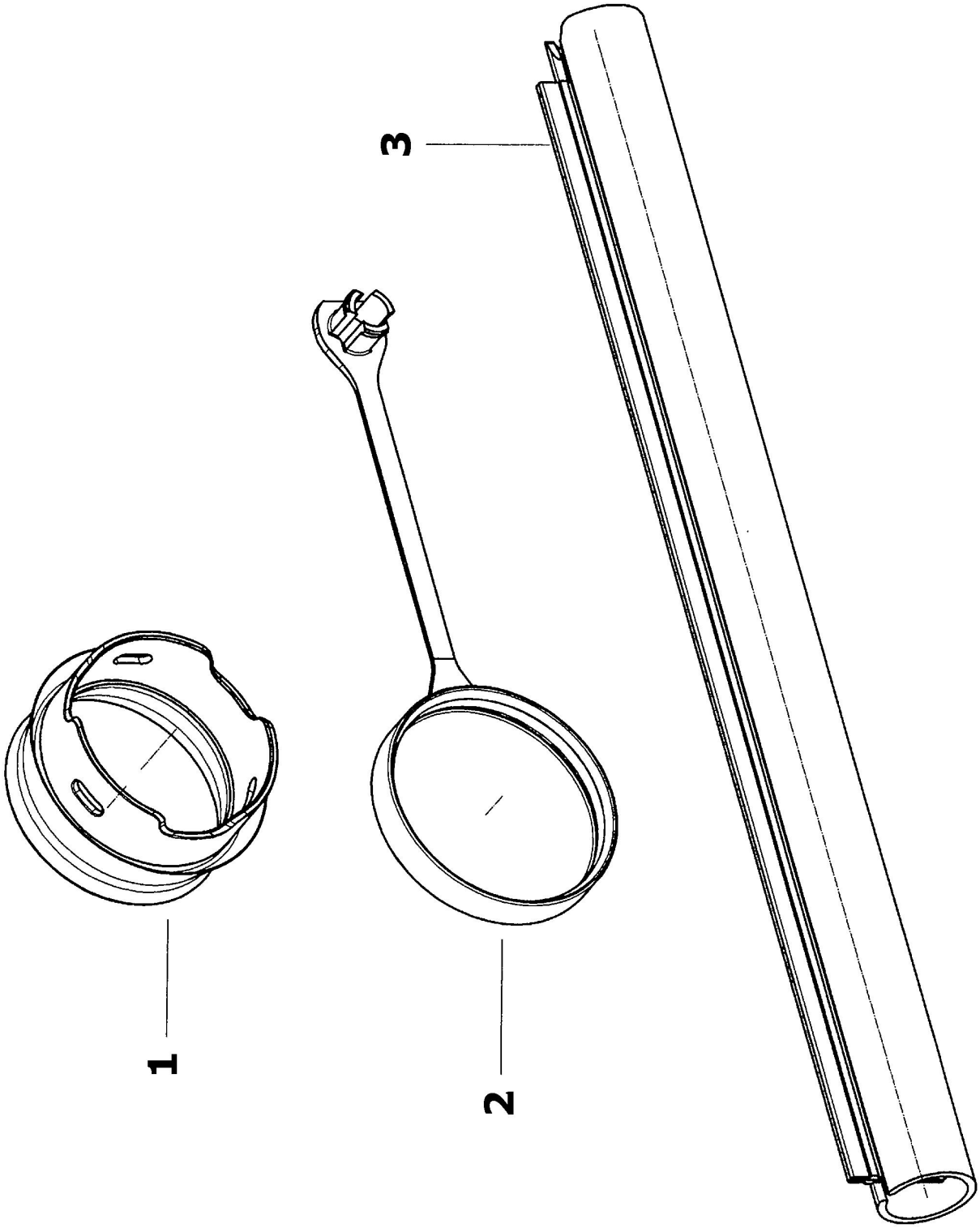496121_USA - Longlife filter bag FIS-CT 36