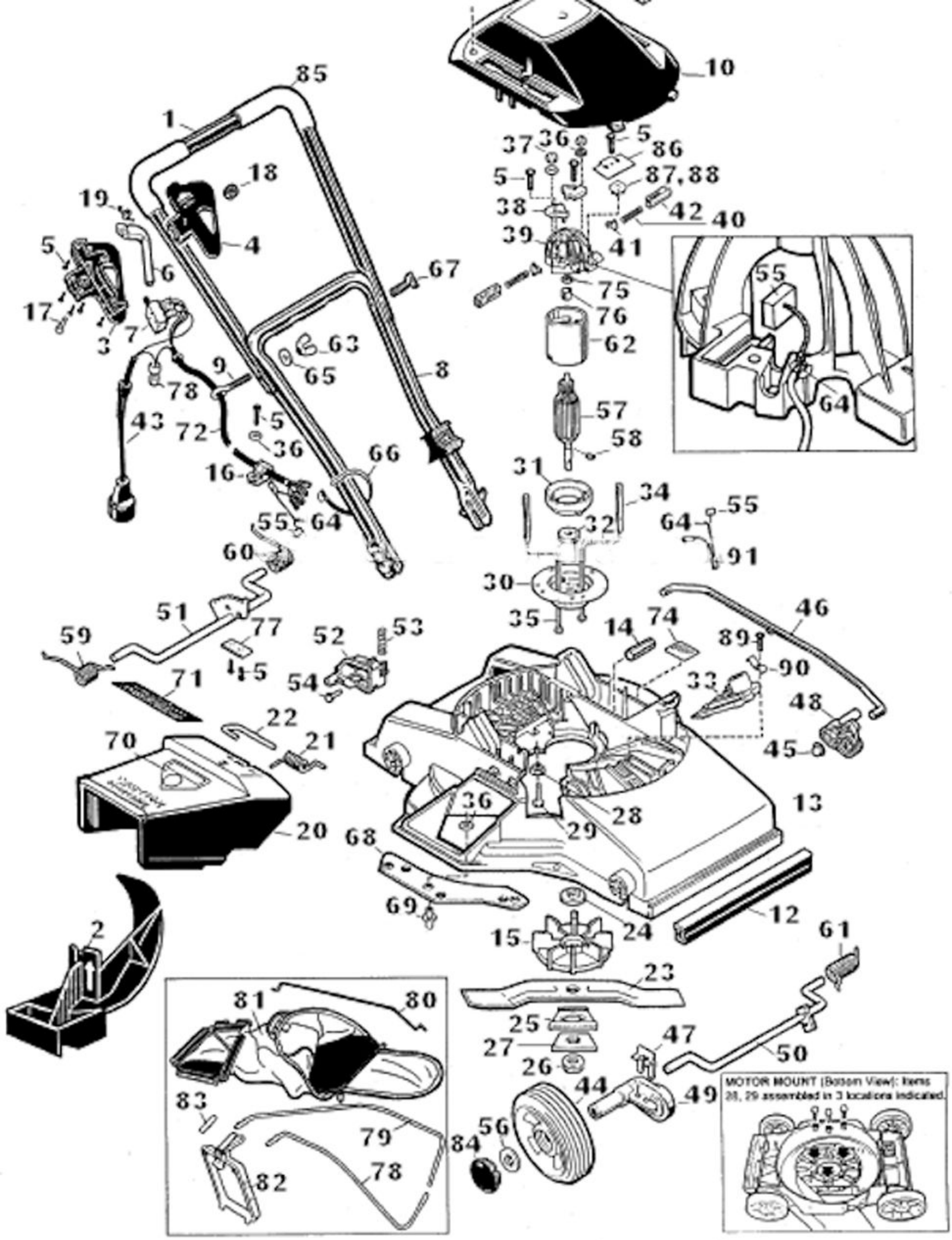
MOTOR MOUNT (Bottom View): Items 28, 29 assembled in 3 locations indicated.