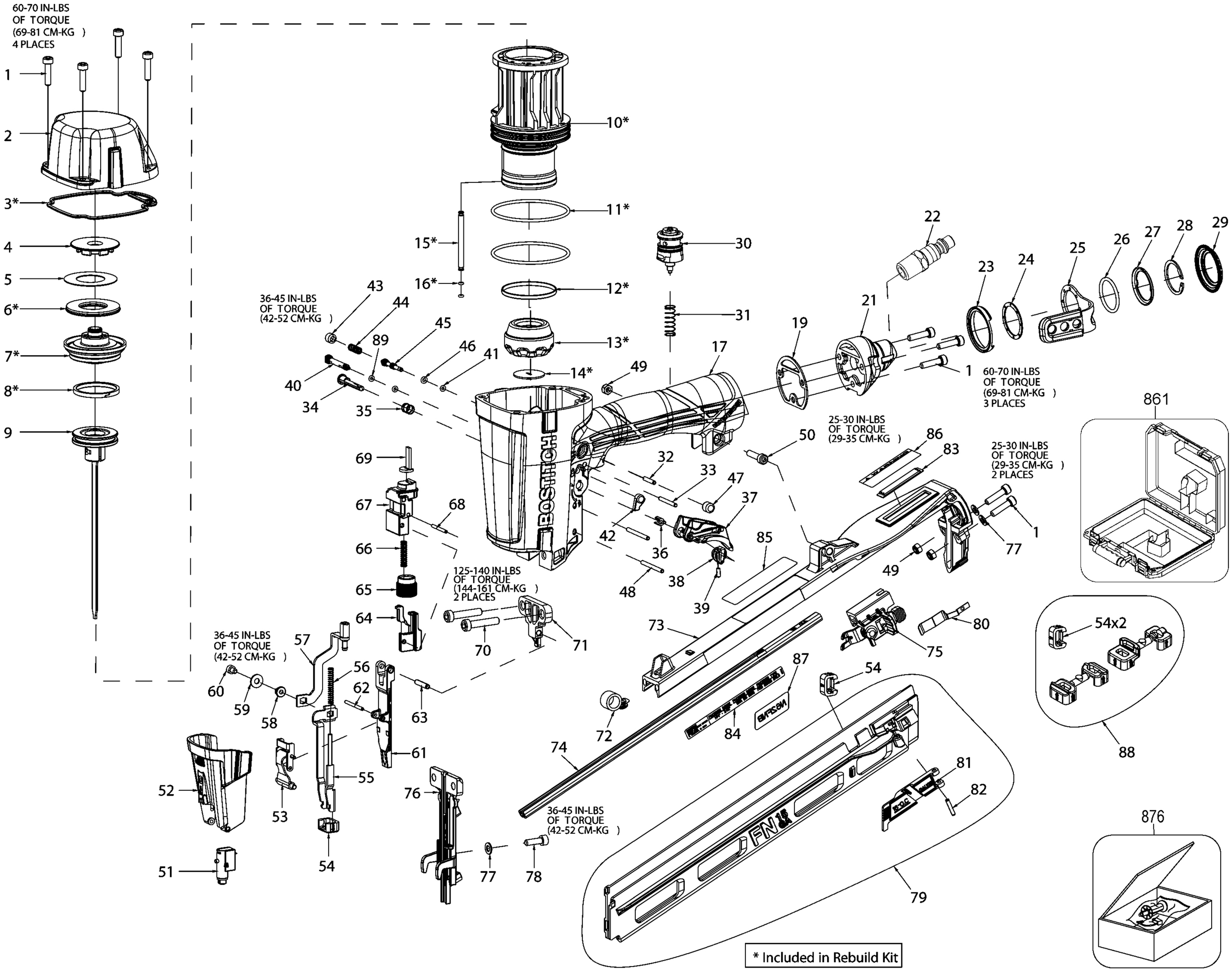
60-70 IN-LBS
OF TORQUE
(69-81 CM-KG)
4 PLACES
36-45 IN-LBS
OF TORQUE
(42-52 CM-KG)
60-70 IN-LBS
OF TORQUE
(69-81 CM-KG)
3 PLACES
25-30 IN-LBS
OF TORQUE
(29-35 CM-KG)
25-30 IN-LBS
OF TORQUE
(29-35 CM-KG)
2 PLACES
125-140 IN-LBS
OF TORQUE
(144-161 CM-KG)
2 PLACES
36-45 IN-LBS
OF TORQUE
(42-52 CM-KG)
36-45 IN-LBS
OF TORQUE
(42-52 CM-KG)
861
54x2
88
876
* Included in Rebuild Kit