4" (100mm) DISC GRINDER

MODEL N9501B
MODEL N9501BZ

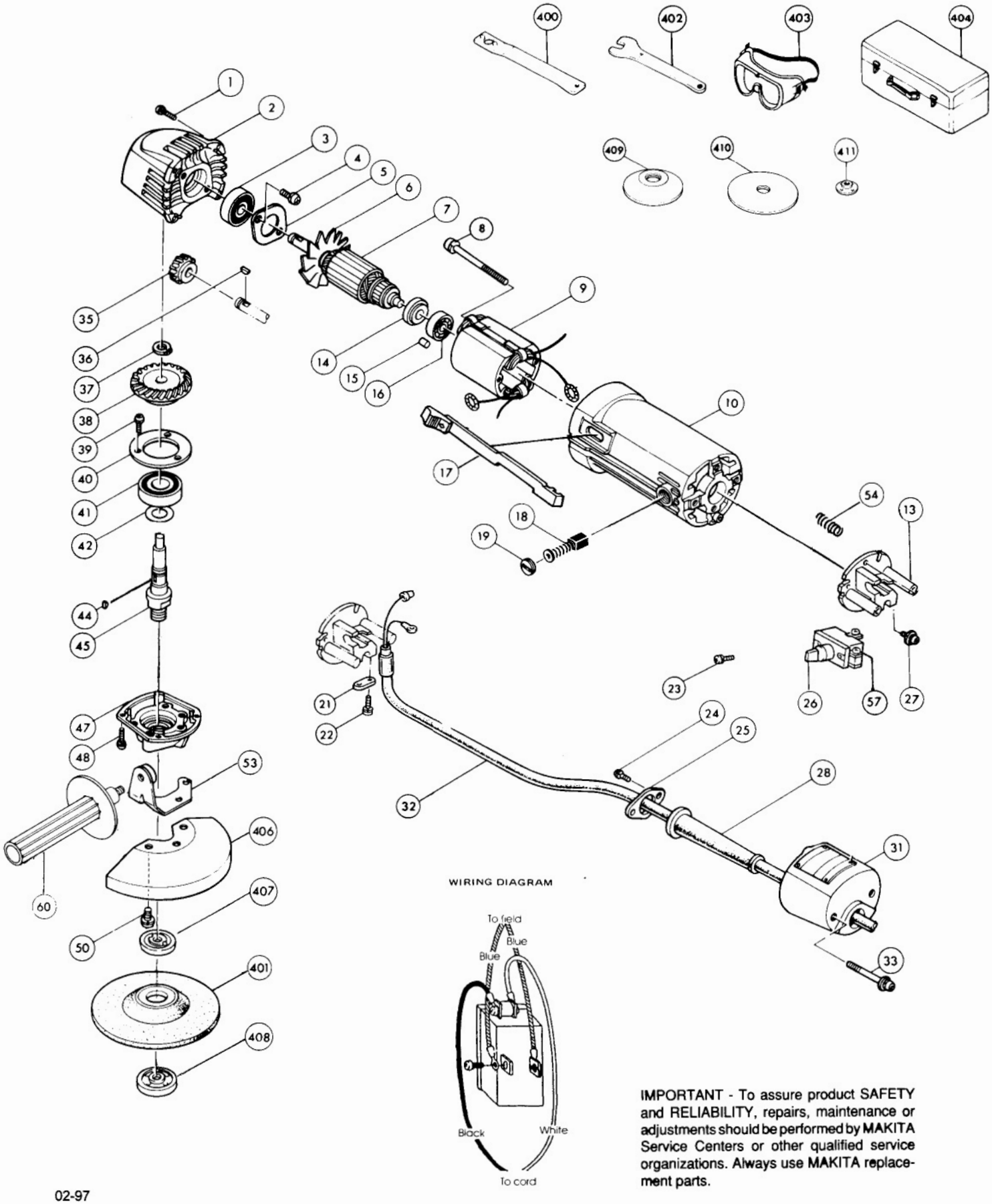

IMPORTANT - To assure product SAFETY and RELIABILITY, repairs, maintenance or adjustments should be performed by MAKITA Service Centers or other qualified service organizations. Always use MAKITA replacement parts.

Fig.	Part No.	Qty. Used	Description
1	911136-9	4	P.H. SCREW M4x20
2	156050-4	1	GEAR HOUSING
3	211088-7	1	B. BEARING 6000DDW
4	911216-1	2	P.H. SCREW M5x14
5	285604-1	1	BEARING RETAINER
6	241068-9	1	FAN 60
7	618819-9	1	ARMATURE
8	251371-0	2	PAN HEAD SCREW M4x70
9	633131-6	1	FIELD
10	159283-0	1	MOTOR HOUSING
13	411490-6	1	SWITCH HOLDER
14	681614-0	1	INS. WASHER
15	263002-9	1	RUBBER PIN 4
16	211026-9	1	B. BEARING 627LLB
17	414660-6	1	SWITCH LEVER
18	191938-1	1	CARBON BRUSH (CB-408)
19	643550-8	2	BRUSH CAP (CB50-53)
21	687001-1	1	STRAIN RELIEF
22	911123-8	2	P.H. SCREW M4x14
23	911006-2	1	P.H. SCREW M3x8
24	911111-5	1	P.H. SCREW M4x10
25	687637-6	1	SET PLATE
26	651460-5	1	SWITCH (AC/DC)
27	911133-5	2	P.H. SCREW M4x18
28	682502-4	1	CORD GUARD
31	411218-2	1	REAR COVER
32	664013-1	1	CORD (2x18x8 SJT)
33	911188-0	2	P.H. SCREW M4x60
35	221229-7	1	SPIRAL B. GEAR
36	254002-0	1	WOODRUFF KEY 3
37	961006-2	1	RETAINING RING S-10
38	221232-8	1	SPIRAL B. GEAR
39	911121-2	3	P.H. SCREW M4x14
40	285616-4	1	BEARING RETAINER
41	211129-9	1	B. BEARING 6201DDW
42	253055-6	1	F. WASHER 12
44	254002-0	1	WOODRUFF KEY 3
45	322423-5	1	SPINDLE
47	312629-3	1	BEARING BOX
48	911121-2	4	P.H. SCREW M4x14
50	911221-8	3	P.H. SCREW M5x16
53	164329-9	1	GRIP HOLDER
54	231223-1	1	COMP. SPRING 6
57	652021-4	4	SWITCH SCREW #5-40x5
60	152490-4	1	SIDE HANDLE
ACCESSORIES			
400	782401-1	1	LOCK NUT WRENCH
401	741402-8-1	1	4" GRINDING WHEEL #24 (1-Pkg.)
402	781007-2	1	SPANNER
403	191686-2	1	SAFETY GOGGLES
404	181717-5	1	STEEL TOOL CASE
406	342554-4	1	4" WHEEL COVER
407	224291-1	1	INNER FLANGE
408	224545-6	1	LOCK NUT 10-35
409	743009-6	1	4" RUBBER PAD
410	742039-4-3	1	4" ABR. DISC #80 (3-Pkg.)
411	224501-6	1	LOCK NUT, SANDING