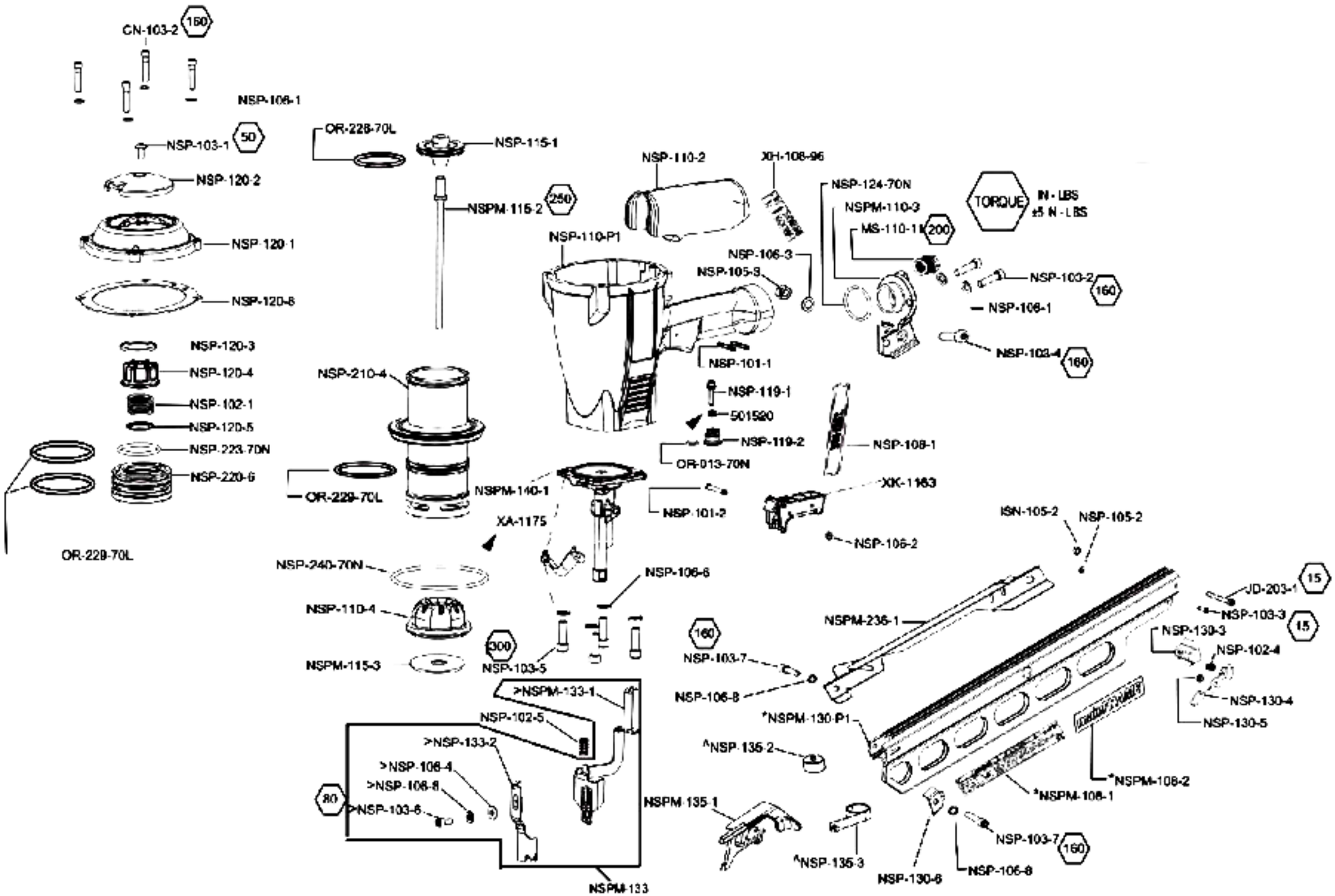
CN-103-2
160
NSP-106-1
NSP-103-1
50
NSP-120-2
NSP-120-1
NSP-120-6
OR-228-70L
NSP-115-1
NSPM-115-2
250
NSP-110-2
XH-108-96
NSP-124-70N
NSPM-110-3
MS-110-1
200
TORQUE
IN - LBS
±5 N - LBS
NSP-110-P1
NSP-106-3
NSP-105-3
NSP-103-2
160
NSP-106-1
NSP-103-4
160
NSP-120-3
NSP-120-4
NSP-102-1
NSP-120-5
NSP-223-70N
NSP-220-6
OR-229-70L
NSP-210-4
OR-229-70L
NSP-101-1
NSP-119-1
501520
NSP-119-2
OR-013-70N
NSP-108-1
XK-1163
NSPM-140-1
XA-1175
NSP-101-2
NSP-106-2
ISN-105-2
NSP-105-2
NSP-240-70N
NSP-106-6
NSP-110-4
NSPM-115-3
300
NSP-103-5
160
NSP-103-7
NSP-106-8
NSPM-236-1
JD-203-1
15
NSP-103-3
15
NSP-130-3
NSP-102-4
NSP-130-4
NSP-130-5
>NSPM-133-1
NSP-102-5
>NSP-133-2
>NSP-106-4
>NSP-106-8
80
>NSP-103-6
NSPM-133
*NSPM-130-P1
^NSP-135-2
*NSPM-108-2
*NSPM-108-1
NSPM-135-1
^NSP-135-3
NSP-130-6
NSP-106-8
NSP-103-7
160