metabo HPT

LIST NO. L806

# ELECTRIC TOOL PARTS LIST

## ■ MULTIPORT CHARGER

**2019· 3 ·15**

## Model UC 18YTSL

**(E1)**

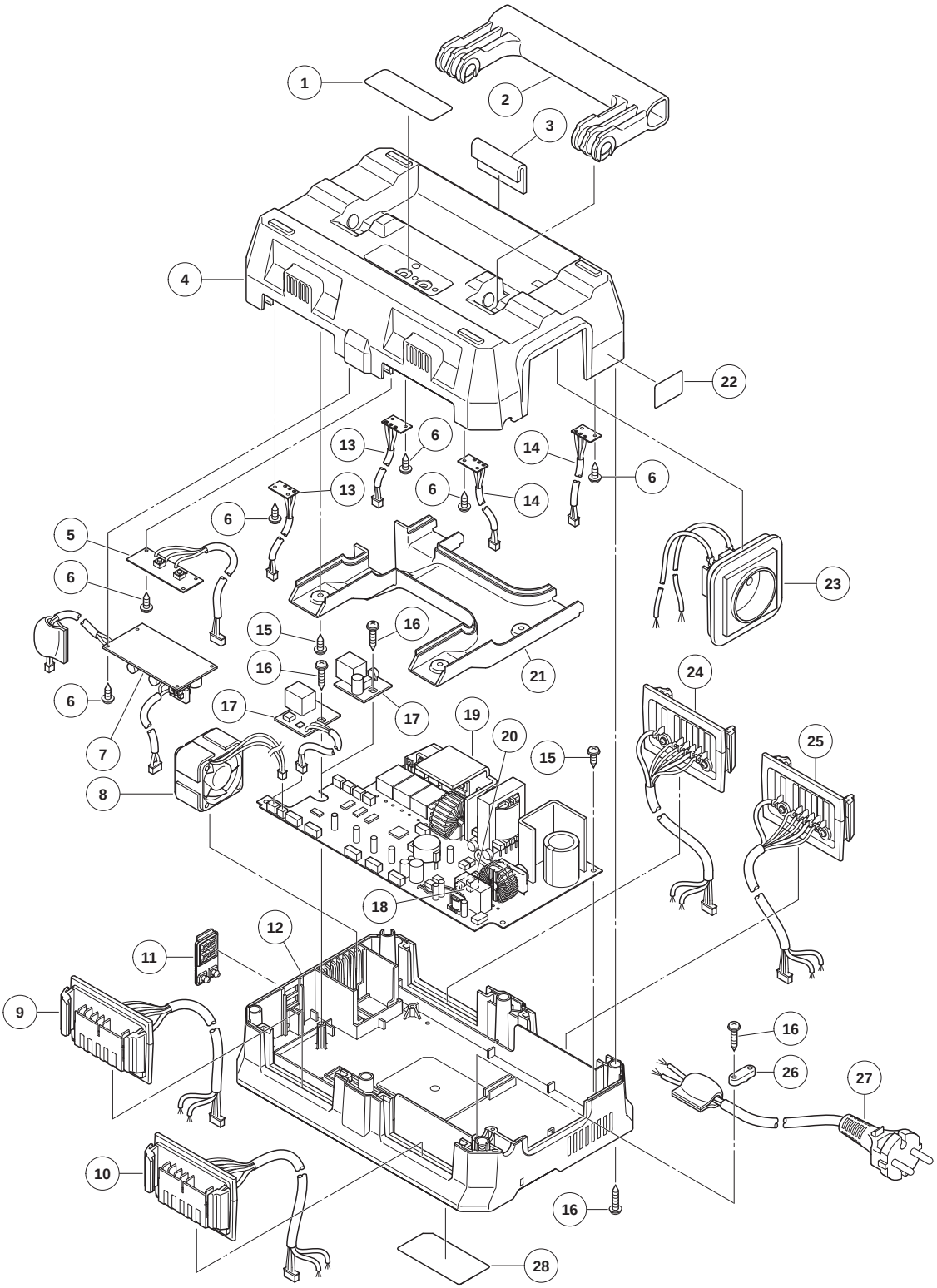


Koki Holdings Co., Ltd.

| | ITEM NO. | CODE NO. | DESCRIPTION | NO. USED | REMARKS | |
|---|---|---|---|---|---|---|
| * | 1 | 375365 | LABEL (B) | 1 | | |
| * | 1 | 374998 | LABEL (C) | 1 | FOR USA,CAN | |
| | 2 | 374993 | HANDLE | 1 | | |
| | 3 | 375576 | CUSHION | 1 | | |
| | 4 | 374970 | CASE (A) | 1 | | |
| * | 5 | 374979 | SWITCH PCB | 1 | | |
| * | 5 | 374978 | SWITCH PCB | 1 | FOR USA,CAN | |
| * | 6 | 339341 | TAPPING SCREW (W/FLANGE) D2 X 8 (BLACK) | 13 | | |
| * | 6 | 339341 | TAPPING SCREW (W/FLANGE) D2 X 8 (BLACK) | 10 | FOR USA,CAN | |
| * | 7 | 374976 | USB PCB (A) | 1 | EXCEPT FOR USA,CAN | |
| | 8 | 370115 | FAN | 1 | | |
| | 9 | 374985 | TERMINAL HOLDER | 1 | | |
| | 10 | 374984 | TERMINAL HOLDER | 1 | | |
| | 11 | 374991 | USB CAP | 1 | | |
| | 12 | 374971 | CASE (B) | 1 | | |
| | 13 | 374980 | LED PCB | 2 | | |
| | 14 | 374981 | LED PCB | 2 | | |
| | 15 | 327174 | TP TAPPING SCREW D3 X 8 | 8 | | |
| | 16 | 326358 | TAPPING SCREW (W/FLANGE) D3 X 18 | 9 | | |
| * | 17 | 374977 | USB PCB (B) | 1 | | |
| * | 17 | 374975 | USB PCB | 1 | FOR USA,CAN | |
| | 18 | 338726 | FUSE | 1 | | |
| * | 19 | 374974 | MAIN PCB ASS'Y (EUROPE,AUS,ASIA) | 1 | INCLUD.18,20 | |
| * | 19 | 374973 | MAIN PCB ASS'Y (USA) | 1 | INCLUD.18,20 | |
| * | 20 | 374995 | FUSE | 1 | | |
| * | 20 | 370116 | FUSE (10A / 250V) | 1 | FOR USA,CAN | |
| | 21 | 374992 | AIR DUCT | 1 | | |
| | 22 | | OUTLET LABEL | 1 | | |
| * | 23 | 374988 | OUTLET (EUROPE,IND) | 1 | | |
| * | 23 | 374990 | OUTLET (GBR,SIN,HKG) | 1 | | |
| * | 23 | 374989 | OUTLET (AUS) | 1 | | |
| * | 23 | 374987 | OUTLET (USA) | 1 | | |
| | 24 | 374982 | TERMINAL HOLDER | 1 | | |
| | 25 | 374983 | TERMINAL HOLDER | 1 | | |
| | 26 | 373311 | CORD CLIP | 1 | | |
| * | 27 | 500534Z | CORD (EUROPE,IND) | 1 | | |
| * | 27 | 500536Z | CORD (GBR,SIN,HKG) | 1 | | |
| * | 27 | 500535Z | CORD (AUS) | 1 | | |
| * | 27 | 500533Z | CORD (USA) | 1 | | |
| | 28 | | NAME PLATE | 1 | | |